ODIAN ENGINEERING inc
29979 Harvester Rd, Malibu, CA. 90265
Telephone: (818) 371-7128, e-mail: kodian@verizon.net

DOCUMENT NO. OE-08-05-304

TEST REPORT:

TEN FOOT HIGH

STEELDECK PLATFORM SYSTEMS

STRUCTURAL CAPACITY

Revision C Dated Dec. 3, 2024

REGISTERED PROFESSIONAL ENGINEER
ROBERT KIRK ODIAN
C 50668
Exp. 9/30/2027
CIVIL
STATE OF CALIFORNIA

Prepared for: **Steeldeck, Inc.**
13147 S Western Avenue
Gardena, CA 90249-1921

Approved By:

Name (print): Kirk Odian
Title: President, M.S., P.E.

PROPRIETARY DOCUMENT
The Information herein is privileged and confidential and shall not be disseminated, duplicated, reused or disclosed in any way without the prior written permission of STEELDECK, Inc. or Odian Engineering, Inc.

Log of Revisions

Revision Letter	Page Number	Section	Description of Change
IR	all	all	Initial release
A	i, v, 1, 6, 20 & 29	Ref., 1.0, 1.2, 3.0 & 5.0	Included current CBC 2016 Compliance.
B	Cover		Updated for new Steeldeck address.
C	Cover page, i-v, 1, 2, 6, 19 & 29	1.0, 1.1, 1.2, 2.0 & 5.0	Updated to cite compliance with latest CBC 2022 revision. Added Ref. 13. All headers updated to show "Rev. C". Updated pagination in ToC, LoF & LoT.

Table of Contents

Log of Revisions i
List of Figures iii
List of Tables iv
References v
1.0 INTRODUCTION 1
1.1 Background 2
1.2 Test Objective 6
1.3 Previous Work 7
1.4 Limitations 10
2.0 EQUIPMENT, PROCEDURES AND TEST PARAMETERS 11
3.0 PLATFORM TEST 21
4.0 TEST RESULTS 28
5.0 SUMMARY OF FINDINGS 29
6.0 Appendix: dwg HEAMS106103 Rev. 0, dated 4/17/07 30

List of Figures

Figure 1-1 Standard STEELDECK® Rectangular Platforms....1
Figure 1-2 Typical STEELDECK® Common Leg Joint....3
Figure 1-3 STEELDECK® Integral Support, Welded to leg....3
Figure 1-4 Typical STEELDECK® Deck-to-deck Connecting Bolt Joint....4
Figure 1-5 Typical STEELDECK® "X" Bracing for platforms above 4 ft....5
Figure 1-6 Tributary Loading of Test Configuration Critical Central Leg....6
Figure 1-7 Manufacturer's "Company Test"....7
Figure 1-8 3 Ft High Platform loaded to 271.0 lbs/ft^2....8
Figure 1-9 4 Foot High Platform loaded to 202.76 lbs/ft^2....9
Figure 2-1 Test Platform, 10 ft high....11
Figure 2-2 Test Platform, 10 ft high measured....12
Figure 2-3 Test Platform, 10 ft high, Long View from below....13
Figure 2-4 Square Steel Tube Stock Bundles, 19 ft 9 ½ in long, minimum....14
Figure 2-5 Zeroed out load cell with empty bucket....15
Figure 2-6 Weight of three feet of unit tube stock, 13.3 lbs ➔ 4.433 lbs/ft....16
Figure 3-1 Load Step 1, Platform loaded to 202.76 lbs/ft^2....21
Figure 3-2 Load Step 1, Platform loaded to 202.76 lbs/ft^2....22
Figure 3-3 Load Step 1, Platform loaded to 202.76 lbs/ft^2....23
Figure 3-4 Load Step 1, Platform loaded to 202.76 lbs/ft^2....24
Figure 3-5 Load Step 1, Platform loaded to 202.76 lbs/ft^2....25
Figure 3-6 10 Foot High Platform Deck S/Ns....26
Figure 3-7 No distress of critical leg-to-deck support mount....27
Figure 3-8 No distress of critical deck-to-deck bearing surfaces....27

List of Tables

Table 2-1 Loading Sequence & Procedure.....19

References

1. 2007 California Code of Regulations, Title 24, Part 2, *California Building Code*
2. 2001 California Code of Regulations, Title 24, Part 2, *California Building Code*
3. 1994 Uniform Building Code, Volume 2, Structural Engineering Design Provision.
4. Steeldeck, Set-up and Safety Manual, Rev. 5/2002.
5. Steeldeck, Platform Systems Catalog, May 2002.
6. British Standards Institution Specification BS 1139: Part 2: 1982, Metal Scaffolding.
7. British Standards Institution Specification BS EN 74-1:2005, Couplers, spigot pins and baseplates for use in falsework and scaffolds, Part 1: Couplers for tubes – Requirements and test procedures.
8. 4'x 8' Steeldeck® Platform Evaluation, Rev. 1 dated April 2007, Hopper Engineering Associates, PRO 196
9. 2013 California Code of Regulations, Title 24, Part 2, California Building Code
10. Odian Engineering Test Rpt. No.: OE-08-05-301; Steeldeck Platform Systems Structural Capacity, Rev. C dated March 10, 2016.
11. Odian Engineering Test Rpt. No.: OE-08-05-303; Four Foot High Steeldeck Platform Systems Structural Capacity, Rev. IR dated March 18, 2016.
12. 2016 California Code of Regulations, Title 24, Part 2, California Building Code.
13. **2022 California Code of Regulations, Title 24, Part 2, California Building Code.**

1.0 INTRODUCTION

This test report presents independent testing and findings conducted by Odian Engineering of the Steeldeck® 4 ft x 8 ft platform system on 10 ft legs. Prior testing of the platform system on 3 ft and 4 ft legs was carried out and reported in References 10 and 11 respectively. **Revision IR of this report presented the test on the 10 ft leg system and showed** continued compliance with the **then** current 2013 California Code of Regulations, Title 24, Part 2, Chapters 16 & 17, **including the full 24 hour dwell testing results per Section 1709A.3.2.** The subsequent Revision A of this test report showed continued compliance with the then current 2016 California Code of Regulations, Title 24, Part 2, Chapters 16 & 17. **This subsequent Revision C of this test report shows continued compliance with the current 2022 California Code of Regulations, Title 24, Part 2, Chapters 16 & 17.** A system of five (5) 4 ft x 8 ft decks, assembled in accordance with the manufacturer's Set-up and Safety Manual (Ref. 4) was tested. This configuration was chosen as it contains the largest free span of the typical deck components offered, and it subjects the deck and leg support joints with the most critical loading.

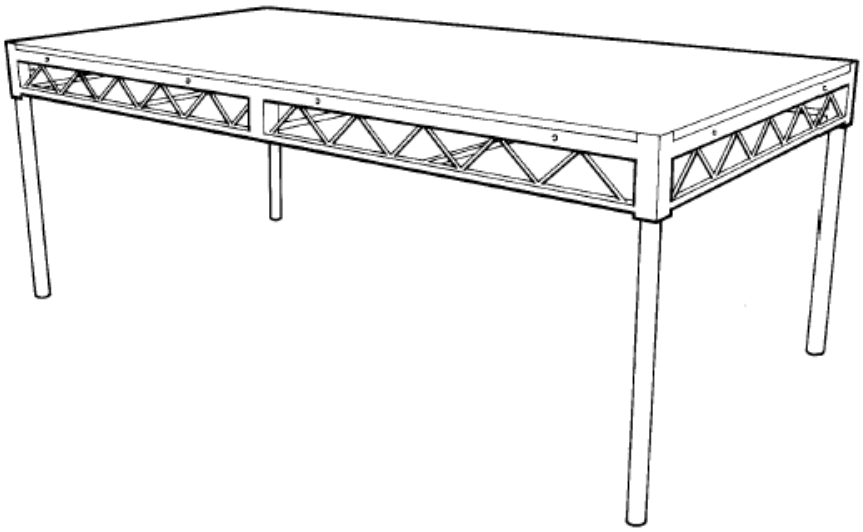

Figure 1-1 Standard STEELDECK® Rectangular Platforms

Odian Engineering Inc.
29979 Harvester Rd., Malibu, CA. 90265
Telephone (818) 371.7128 e-mail: kodian@verizon.net

1.1 Background

Steeldeck manufactures platform systems for sale and rent. These systems are typically employed as assembled platforms in various private and sometimes public venues. Often, the platforms are assembled as a connected system to erect a large platform of variable shape. This is accomplished by virtue of the modular design and the ability to connect the individual platforms of different sizes and shapes together.

As previously stated, a system of five (5) 4 ft x 8 ft decks assembled together as an 8 ft x 20 ft rectangular platform 10 ft high was selected as the test configuration. This configuration was selected since it represents the critical spans and maximum joint loading. Additionally, this assembled platform overall dimension was sized to accommodate the approximately 20 ft long steel bundles of tare weight employed for the test load.

When erecting an assembled platform, the first deck is set on four (up to six for some shapes) corner legs which are captured in the corner sockets. On legs which will be common to the adjoining decks, couplers are provided as an assembly aid. The couplers provide a temporary support for the neighboring platforms to be placed on (see Reference 5, Steeldeck catalog, and Figure 1-2 herein). Note, the supports in the newer design are integrally welded to the legs for a reduction of piece parts, and to provide a redundant load path to the supporting leg when multiple decks interface and are supported by a common leg. The neighboring decks receive legs in their outboard corner sockets which do not rest on the first deck's coupler support. At the common edges of all decks, frame connecting bolts are installed which secure the two decks together. Thus, the central leg common to the first deck in the selected test platform configuration will bear ¼ of the live load from the four assembled decks. The following Figures show the typical platform erection process, erection aid couplers, fixed deck-to-deck connection bolts and the critical test assembly and load sharing.

Odian Engineering Inc.
29979 Harvester Rd., Malibu, CA. 90265
Telephone (818) 371.7128 e-mail: kodian@verizon.net

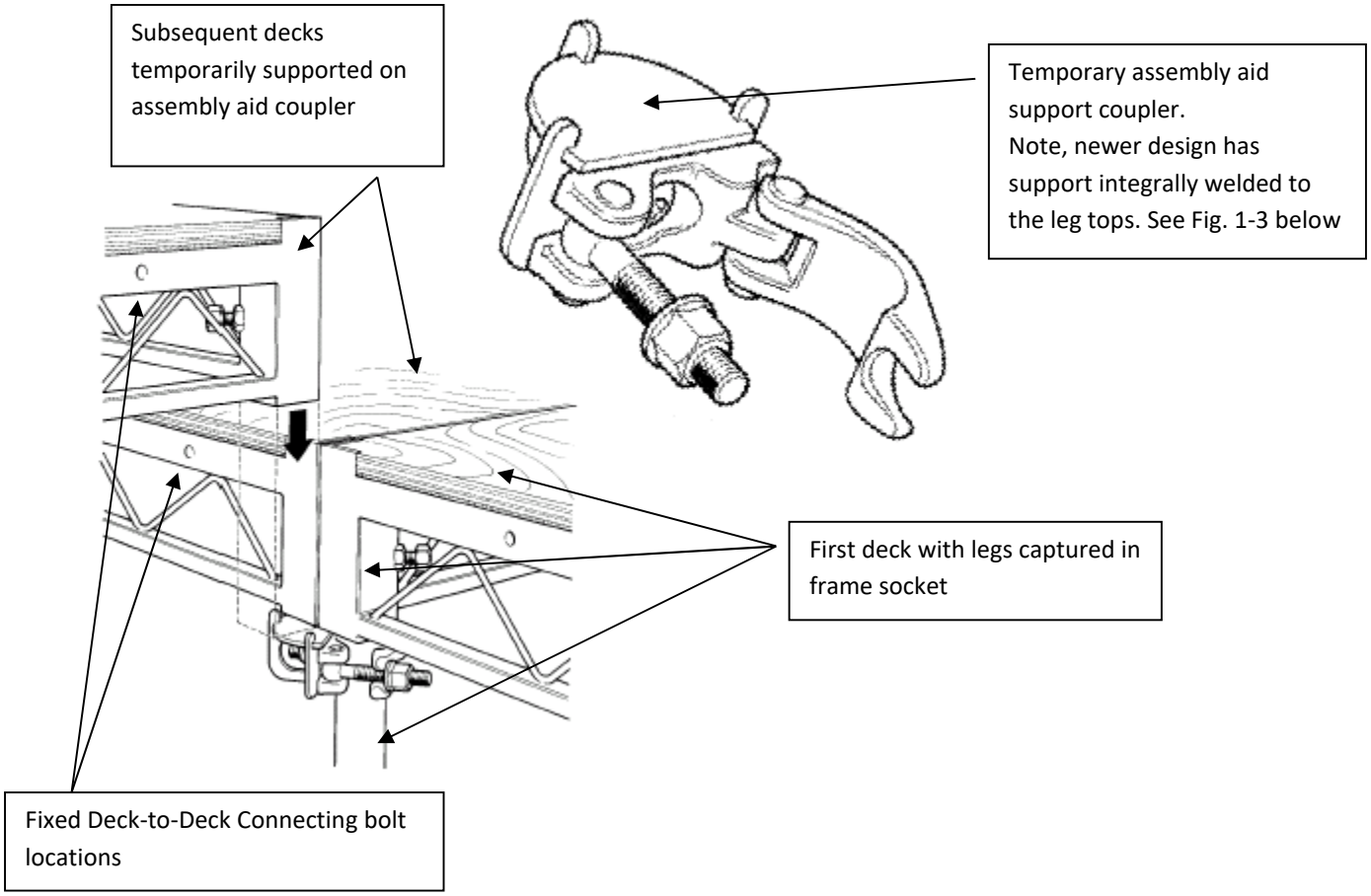

Figure 1-2 Typical STEELDECK® Common Leg Joint

Figure 1-3 STEELDECK® Integral Support, Welded to leg

Odian Engineering Inc.
29979 Harvester Rd., Malibu, CA. 90265
Telephone (818) 371.7128 e-mail: kodian@verizon.net

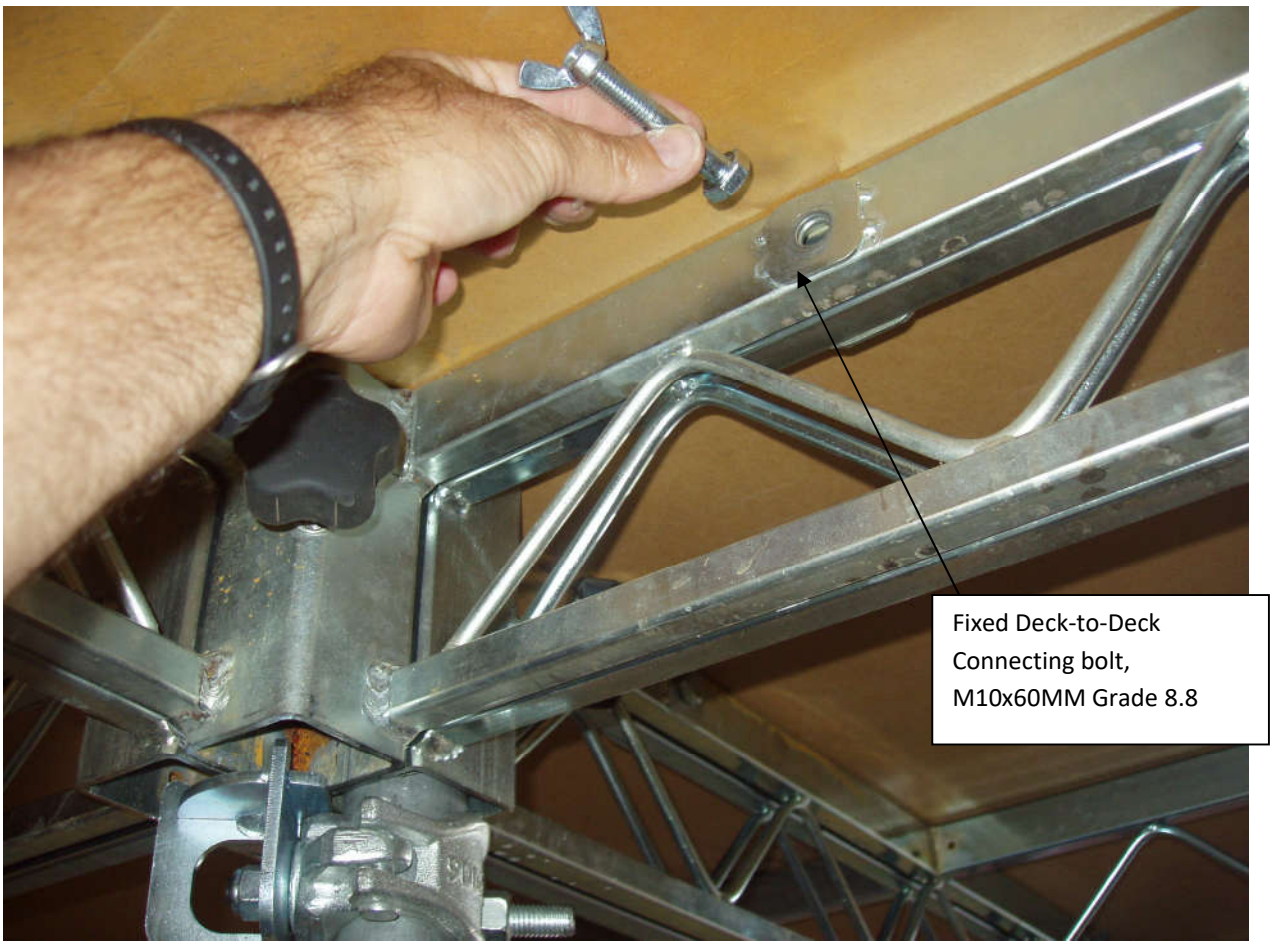

Figure 1-4 Typical STEELDECK® Deck-to-deck Connecting Bolt Joint

Odian Engineering Inc.
29979 Harvester Rd., Malibu, CA. 90265
Telephone (818) 371.7128 e-mail: kodian@verizon.net

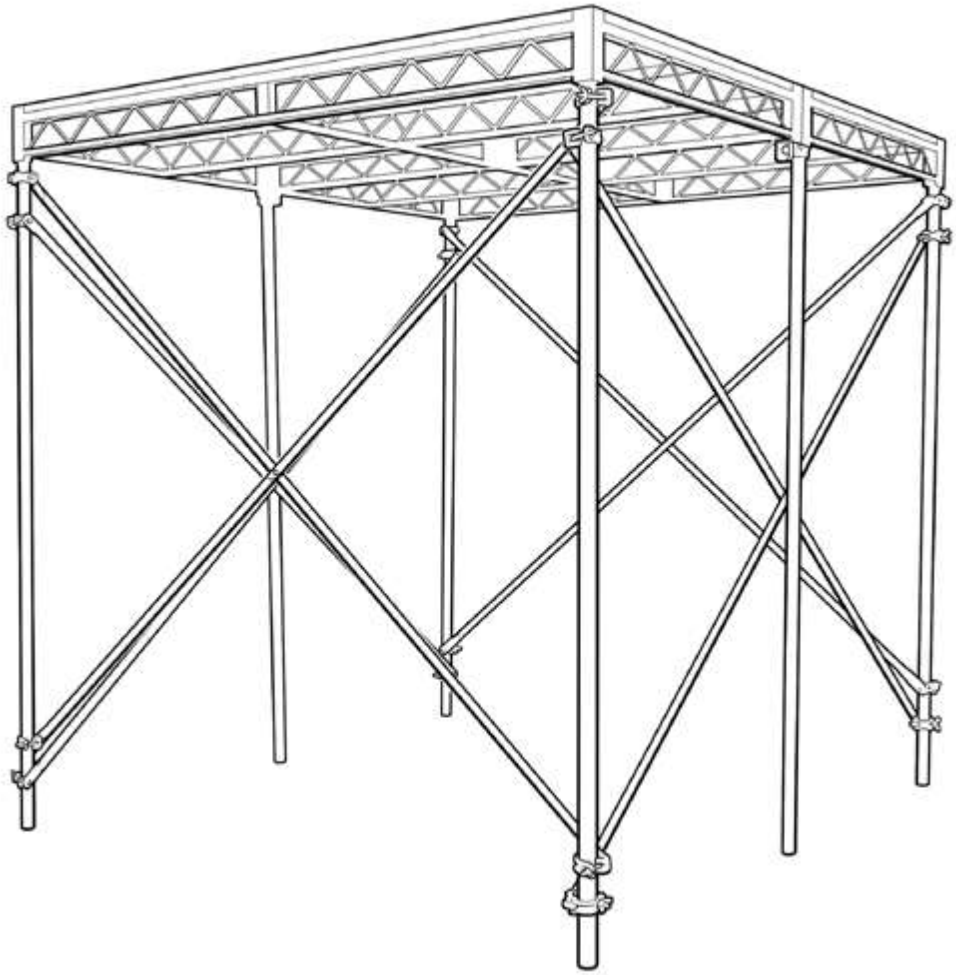

Figure 1-5 Typical STEELDECK® "X" Bracing for platforms above 4 ft.

Odian Engineering Inc.
29979 Harvester Rd., Malibu, CA. 90265
Telephone (818) 371.7128 e-mail: kodian@verizon.net

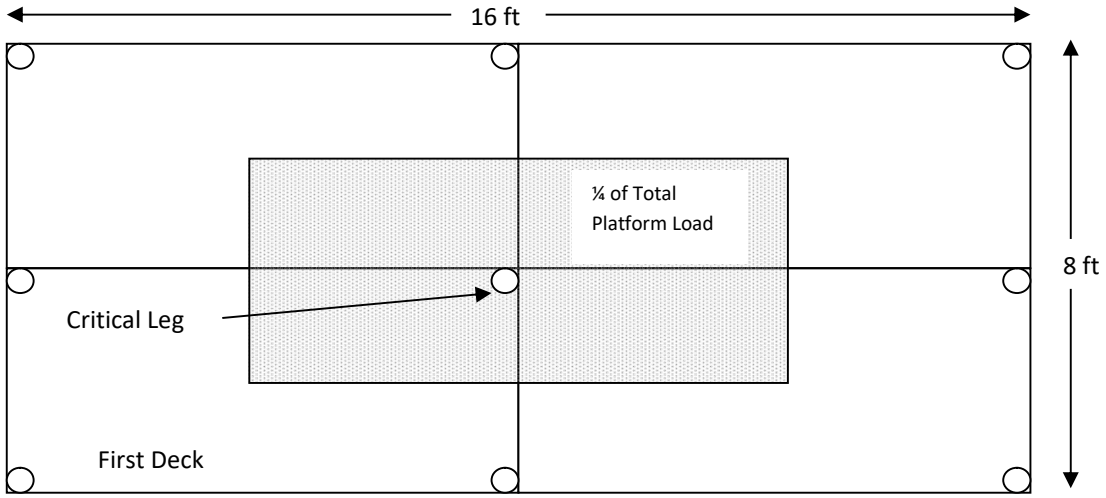

Figure 1-6 Tributary Loading of Test Configuration Critical Central Leg

1.2 Test Objective

The **2022** California Code of Regulations, Title 24, Part 2, Chapters 16, Table 1607.1, Minimum Uniformly Distributed Live Loads and Minimum Concentrated Live Loads, establishes the required loading for platforms (assembly) as 100 lbs/ft2. Section 1709 of the same code sets forth In-Situ Load Test methodology. Consistent with the intent of Section 1709**,** the objective of this testing was to subject the platform assembly to two times the unfactored Design Load (2x100 = 200 lbs/ft2) for a 24 hour dwell period. The test procedure employed has been developed by this author, a registered Professional Engineer in the State of California. The test procedure simulates loads and conditions of application that the completed structure or portion thereof will be subjected to in normal use. **Due to temporary erection, negligible lateral section area, and primarily indoor or covered or protected applications, the testing ignored any wind loading effects.** Thes structure shall be considered to have successfully met the test requirements where the following criteria are satisfied:

1. Under the Design Load, the deflection shall not exceed the limitations specified in California Code of Regulations, Title 24, Part 2, Section 1604.3 (longest span/360 inches).
2. Within 24 hours after removal of the test load, the structure shall have recovered not less than 75 percent of the maximum deflection.
3. During and immediately after the test, the structure shall not show evidence of failure.

Odian Engineering Inc.
29979 Harvester Rd., Malibu, CA. 90265
Telephone (818) 371.7128 e-mail: kodian@verizon.net

1.3 Previous Work

Reference 8 contains an analytical structural substantiation of the same 4 ft x 8 ft Standard deck. That analysis was performed by Hopper Engineering under the supervision and approval of a Registered Professional Engineer. The analysis contained both classical closed form hand calculations as well as a detailed Finite Element Analysis of the deck. A Design Load of 125 lbs/ft^2 was substantiated in that report.

The subject platform systems, as designed, have been in use for over 20 years primarily in the entertainment industry. They have been subjected to on the job in-situ loading of similar magnitude reportedly without any catastrophic incident. Typically the on the job loading demands placed on the platforms is far less than the aforementioned design requirements.

The manufacturer conducted a similar test as that proposed herein; "Company Test". He erected a 2 ft high, four 4 ft x 8 ft deck platform and loaded one deck quadrant with 12,700 lbs of tare weight in racks. This represented nearly 400 lbs/ft^2, but the load was not necessarily uniformly loaded, and only one deck quadrant was loaded.

Figure 1-7 Manufacturer's "Company Test"

Odian Engineering Inc.
29979 Harvester Rd., Malibu, CA. 90265
Telephone (818) 371.7128 e-mail: kodian@verizon.net

Reference 10 presents prior testing accomplished by this author on a three foot tall system. 8 ft x 16 ft rectangular platforms were erected on a flat concrete floor inside a warehouse.
The platforms consisted of four Standard 4 ft x 8 ft decks, conforming to dwg HEAMS106103 Rev. 0, which were set on 3 ft legs (1-1/2 Schedule 40 steel pipe) and adjoined together as per the standard procedures outlined in the preceding and in Reference 4. The platforms were then sequentially loaded with bags of cement tare in order to achieve conservative total loading in excess of the requirements. Below is a photo from that testing at 271 lbs/ft^2 area loading.

Figure 1-8 3 Ft High Platform loaded to 271.0 lbs/ft^2

Odian Engineering Inc.
29979 Harvester Rd., Malibu, CA. 90265
Telephone (818) 371.7128 e-mail: kodian@verizon.net

Reference 11 presents prior testing accomplished by this author on a four foot tall system. An 8 ft x 20 ft rectangular platform was erected on a flat concrete floor inside a warehouse.
The platforms consisted of five Standard 4 ft x 8 ft decks, conforming to dwg HEAMS106103 Rev. 0, which were set on 4 ft legs (1-1/2 Schedule 40 steel pipe) and adjoined together as per the standard procedures outlined in the preceding and in Reference 4. The platform was then loaded with steel tubing tare in order to achieve conservative total loading in excess of the requirements. Below is a photo from that testing at 202.76 lbs/ft^2 area loading.

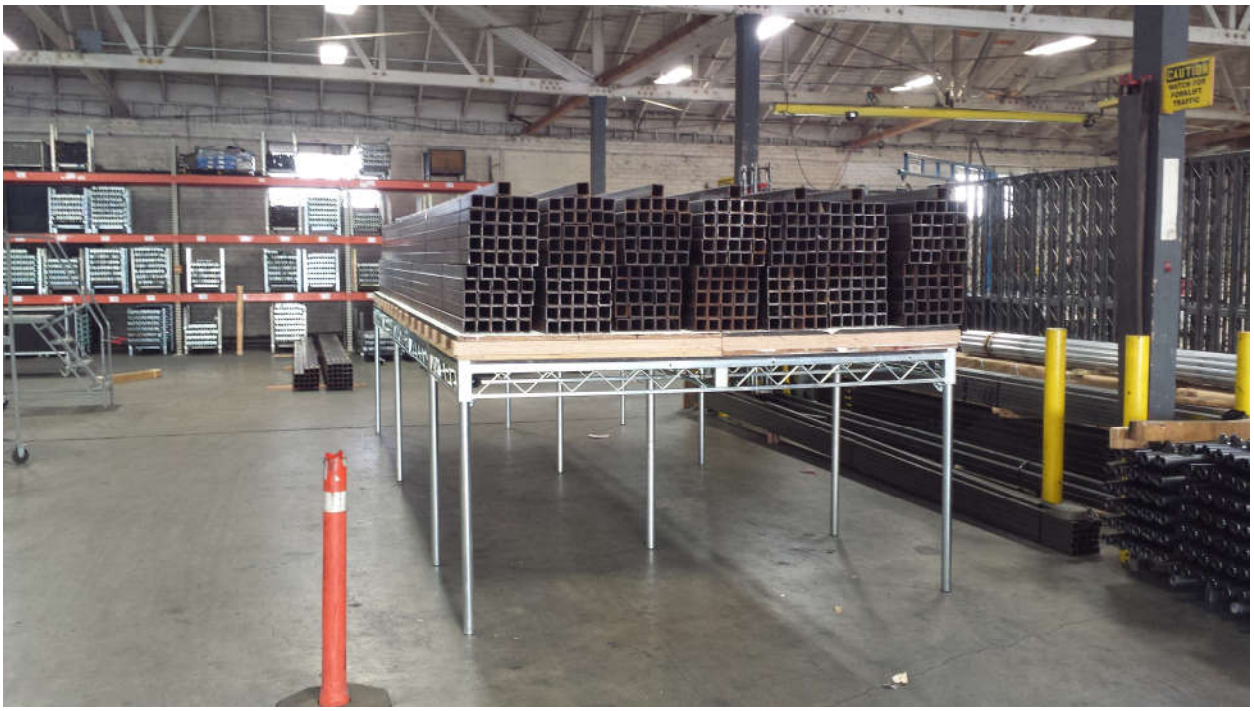

Figure 1-9 4 Foot High Platform loaded to 202.76 lbs/ft^2

Odian Engineering Inc.
29979 Harvester Rd., Malibu, CA. 90265
Telephone (818) 371.7128 e-mail: kodian@verizon.net

1.4 Limitations

The results of the testing proposed herein is limited to the following:

1. Deck modules made of the same grade and truss beam configuration as that which was tested (per dwg HEAMS106103 Rev. 0, dated 4/17/07).
2. Platforms erected to a maximum height of 10 feet.
3. Vertical Live Load conditions.

Odian Engineering Inc.
29979 Harvester Rd., Malibu, CA. 90265
Telephone (818) 371.7128 e-mail: kodian@verizon.net

2.0 EQUIPMENT, PROCEDURES AND TEST PARAMETERS

An 8 ft x 20 ft rectangular platform was erected on a flat concrete floor inside the Steedeck wherehouse. The platform consisted of five Standard 4 ft x 8 ft decks, conforming to dwg HEAMS106103 Rev. 0, which were set on 10 ft legs (1-1/2 Schedule 40 steel pipe) and adjoined together as per the standard procedures outlined in the preceding and in Reference 4. All equipment and hardware were randomly selected from rental stock to ensure a typical "as used" condition. The platform size erected was chosen to match that of approximately 20 ft long steel tube stock to be used as tare weight.

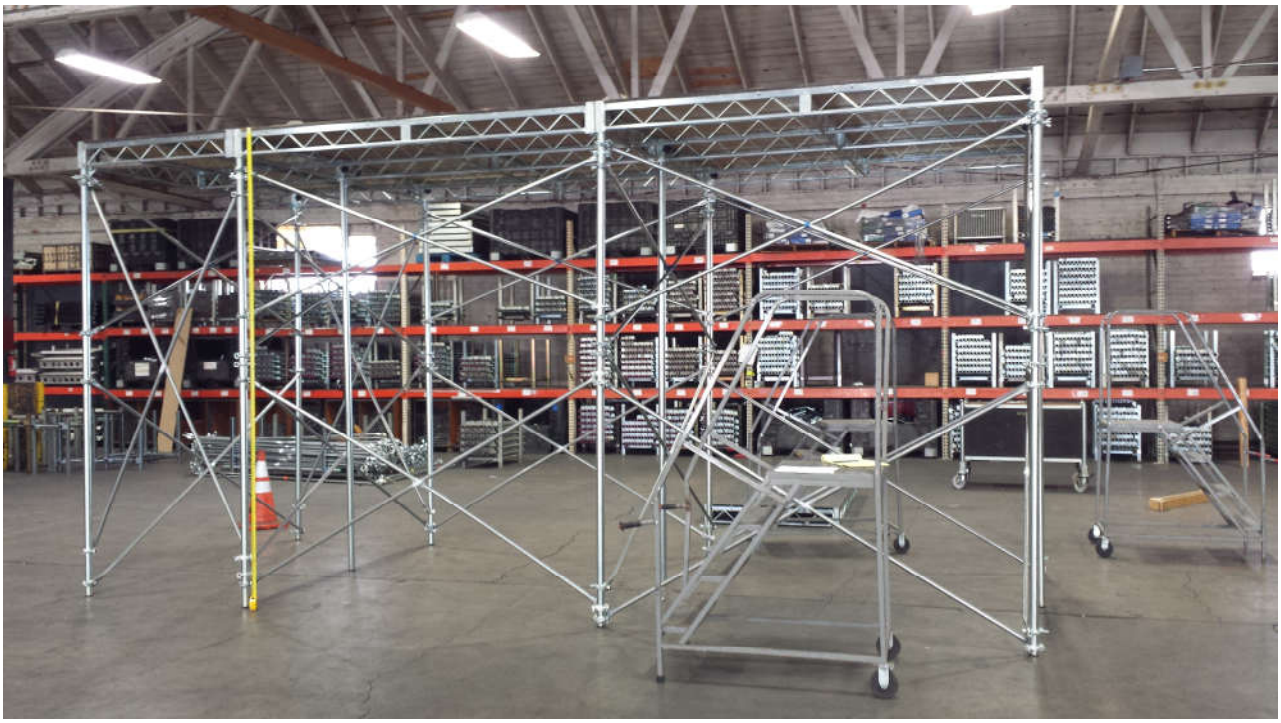

Figure 2-1 Test Platform, 10 ft high

Odian Engineering Inc.
29979 Harvester Rd., Malibu, CA. 90265
Telephone (818) 371.7128 e-mail: kodian@verizon.net

Figure 2-2 Test Platform, 10 ft high measured

Odian Engineering Inc.
29979 Harvester Rd., Malibu, CA. 90265
Telephone (818) 371.7128 e-mail: kodian@verizon.net

Figure 2-3 Test Platform, 10 ft high, Long View from below

Live load consisted of bundles of 19' 9 1/2" long (= 19.8 ft), structural tube steel stock used to fabricate the platform framing. There are 25 tubes in each bundle. The running weight of the tube stock was derived by measuring three one foot segments of the tube stock selected at random. The three one foot segments weighed 13.3 lbs collectively giving a unit running weight of 4.433 lbs/ft for the tube stock. The bundles of tube stock were placed by fork lifts onto five robust wooden pallets which served to overlap the platform deck joints and help distribute the load uniformly. Each wooden pallet weighed equal to or in excess of 221 lbs. Therefore, when loading one layer of 7 bundles onto the 5 wooden pallets, we achieve a total area tare weight of (4.433lb/ft * 19.8 ft * 25 tubes/bundle * 7 bundles + 5 pallets * 221 lbs/pallet) / (5 * 4 ft x 8 ft) = 102.9 lbs/ft^2.

To achieve the 2xDesign Load of 200 lbs/ft^2, a second level of 7 more bundles were added, along with one single tube on top of each bundle stack (seven total single tubes). This generated a total area tare weight of (4.433lb/ft * 19.8 ft * 25 tubes/bundle * 7 bundles * 2 layers + 4.433lb/ft * 19.8 ft * 7 single tubes + 5 pallets * 221 lbs/pallet)/(5 * 4 ft x 8 ft) = 202.76 lbs/ft^2.

Odian Engineering Inc.
29979 Harvester Rd., Malibu, CA. 90265
Telephone (818) 371.7128 e-mail: kodian@verizon.net

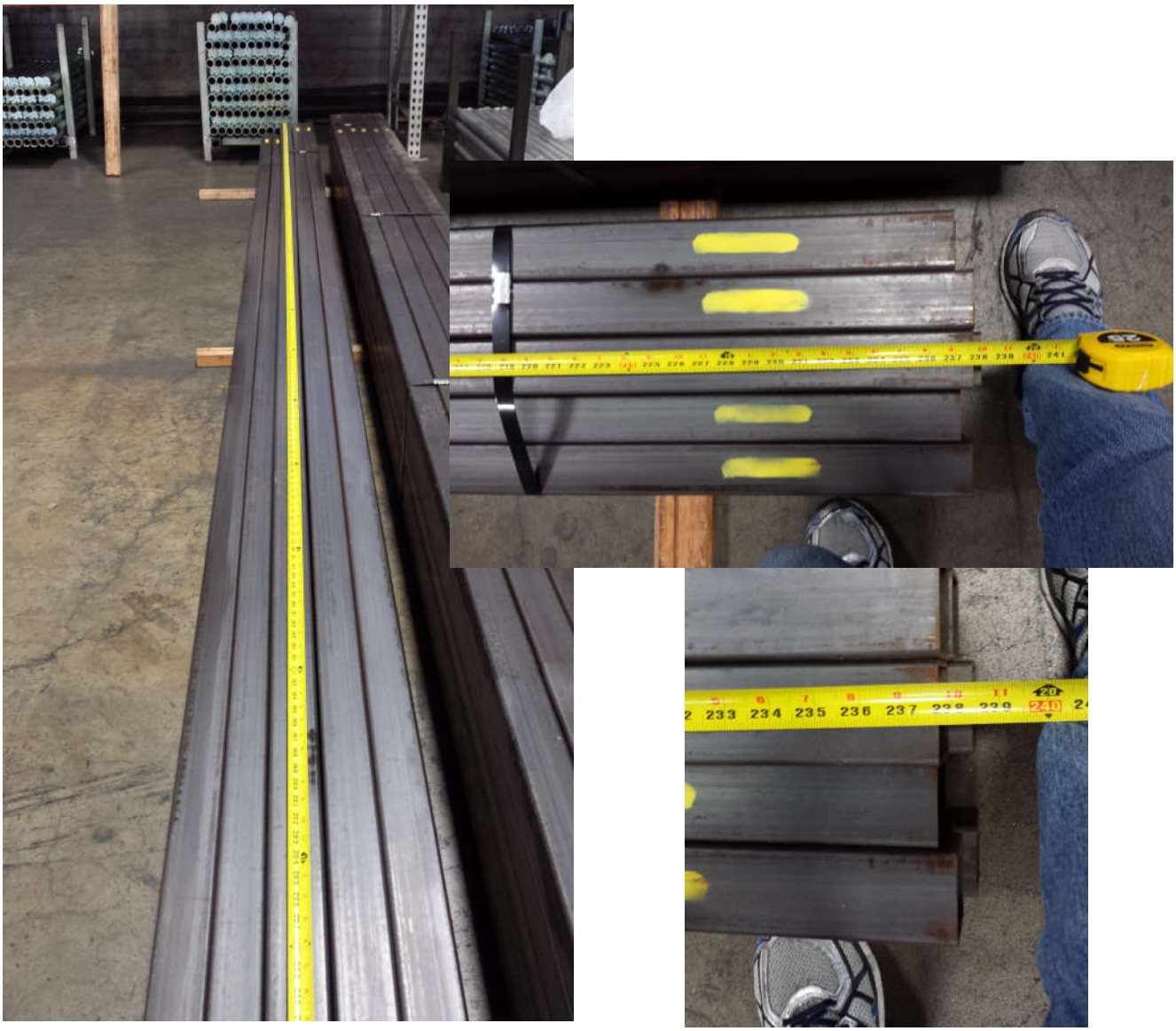

Figure 2-4 Square Steel Tube Stock Bundles, 19 ft 9 ½ in long, minimum

Odian Engineering Inc.
29979 Harvester Rd., Malibu, CA. 90265
Telephone (818) 371.7128 e-mail: kodian@verizon.net

Figure 2-5 Zeroed out load cell with empty bucket

Odian Engineering Inc.
29979 Harvester Rd., Malibu, CA. 90265
Telephone (818) 371.7128 e-mail: kodian@verizon.net

Figure 2-6 Weight of three feet of unit tube stock, 13.3 lbs ➔ 4.433 lbs/ft

Odian Engineering Inc.
29979 Harvester Rd., Malibu, CA. 90265
Telephone (818) 371.7128 e-mail: kodian@verizon.net

Figure 2-7 Single Wooden Pallet

Figure 2-8 10 ft. tall 8x20 ft. Platform with >/= 221 lb wooden pallets in place, overlapping deck seams

Odian Engineering Inc.
29979 Harvester Rd., Malibu, CA. 90265
Telephone (818) 371.7128 e-mail: kodian@verizon.net

Figure 2-9 10 ft. tall 8x20 ft. Platform with >/= 221 lb wooden pallets in place, overlapping deck seams

Odian Engineering Inc.
29979 Harvester Rd., Malibu, CA. 90265
Telephone (818) 371.7128 e-mail: kodian@verizon.net

The performance of the individual decks was previously tested as reported in Reference 11, and proven to be compliant with the then current 2013 California Code of Regulations, Title 24, Part 2, Chapters 16 & 17, and also the current **2022** California Code of Regulations, Title 24, Part 2, Chapters 16 & 17. Thus, the test reported herein was primarily accomplished to verify the stability of the tall 10 ft platforms over the 24 hour dwell period. This test was carried out in three steps. The first step applied 2*Design Load of 200 lbs/ ft^2 (actual 202.76 lbs/ft^2) for a 24 hour dwell. The second step unloaded the platform post 24 hour dwell period. The third step verified no permanent set and elastic deflection recovery. The following table summarizes the load steps and applied distributed loading.

Table 2-1 Loading Sequence & Procedure

Load Step	Distributed Load (lbs/ft^2)	Dwell Time (hrs:min:sec)
1	202.76	24:30:00
2	Unload the entire platform after 24 hr dwell.	
3	Check for any signs of distress and verify elastic deflection recovery.	

Odian Engineering Inc.
29979 Harvester Rd., Malibu, CA. 90265
Telephone (818) 371.7128 e-mail: kodian@verizon.net

3.0 PLATFORM TEST

On December 3rd and 4th, 2015, this author conducted the platform tests as described in the preceding chapter and as shown in the following photographs. All phases of the platform erection, loading and unloading were witnessed by this author. Intermediate inspections and teardown inspections of the test articles were carried out by this author.

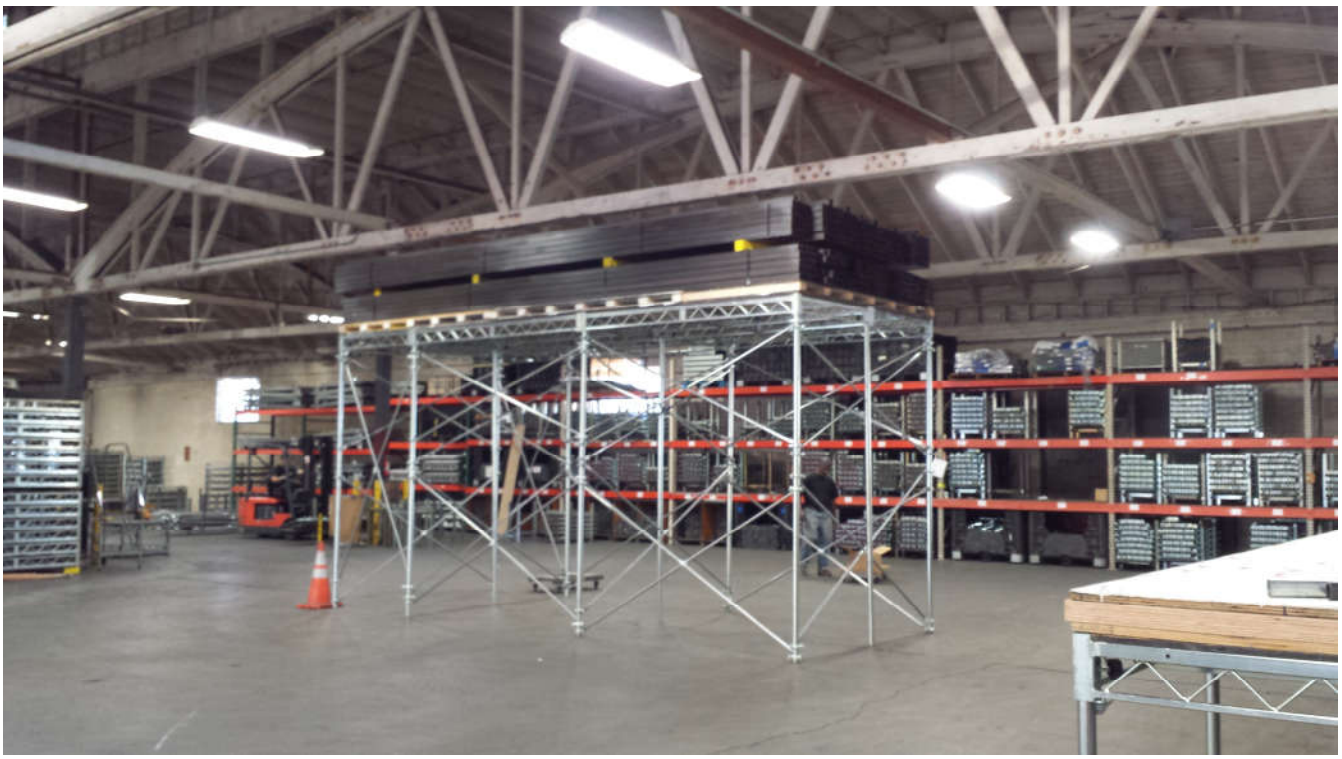

Figure 3-1 Load Step 1, Platform loaded to 202.76 lbs/ft^2

Odian Engineering Inc.
29979 Harvester Rd., Malibu, CA. 90265
Telephone (818) 371.7128 e-mail: kodian@verizon.net

Figure 3-2 Load Step 1, Platform loaded to 202.76 lbs/ft^2

Odian Engineering Inc.
29979 Harvester Rd., Malibu, CA. 90265
Telephone (818) 371.7128 e-mail: kodian@verizon.net

Figure 3-3 Load Step 1, Platform loaded to 202.76 lbs/ft^2

Odian Engineering Inc.
29979 Harvester Rd., Malibu, CA. 90265
Telephone (818) 371.7128 e-mail: kodian@verizon.net

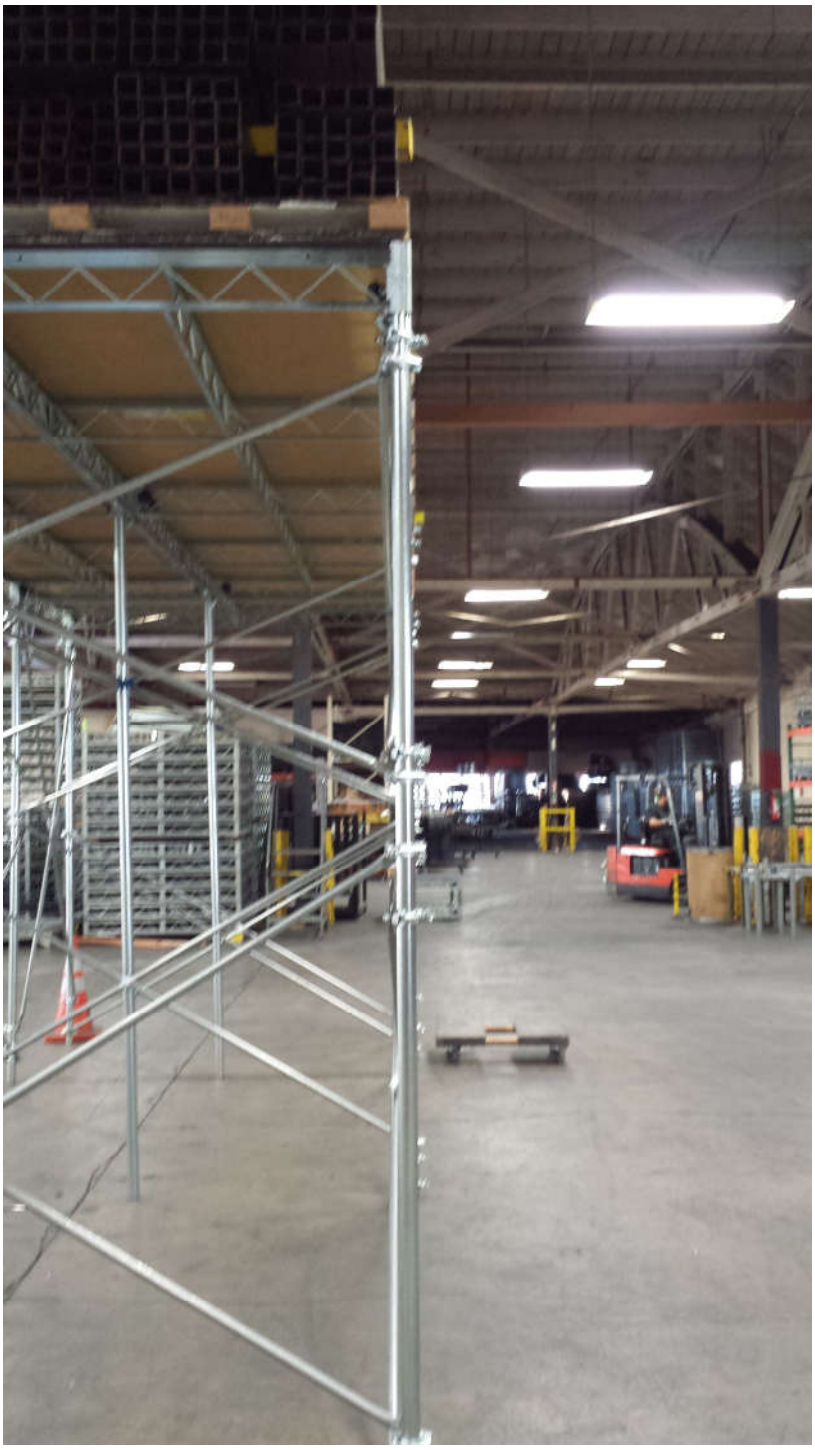

Figure 3-4 Load Step 1, Platform loaded to 202.76 lbs/ft^2

Odian Engineering Inc.
29979 Harvester Rd., Malibu, CA. 90265
Telephone (818) 371.7128 e-mail: kodian@verizon.net

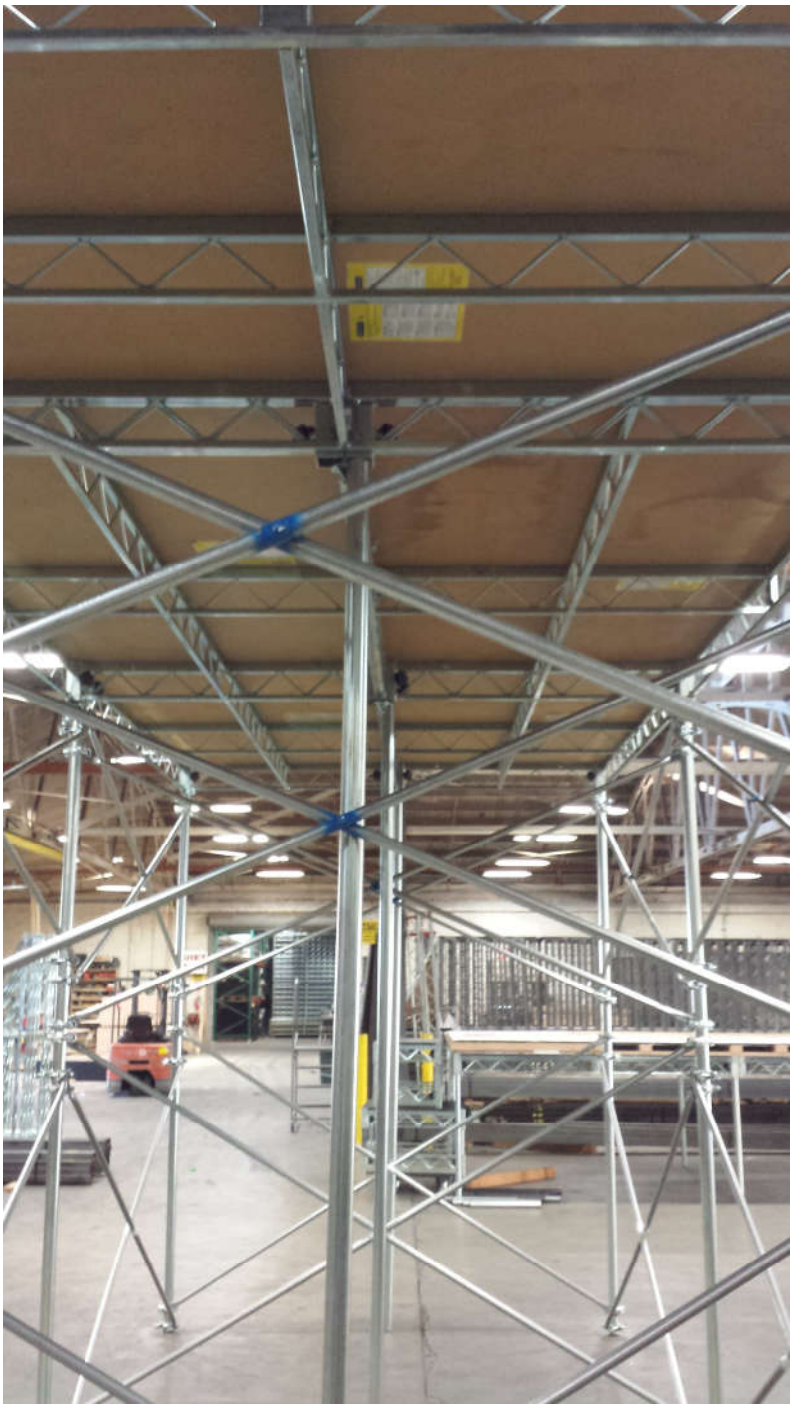

Figure 3-5 Load Step 1, Platform loaded to 202.76 lbs/ft^2

Odian Engineering Inc.
29979 Harvester Rd., Malibu, CA. 90265
Telephone (818) 371.7128 e-mail: kodian@verizon.net

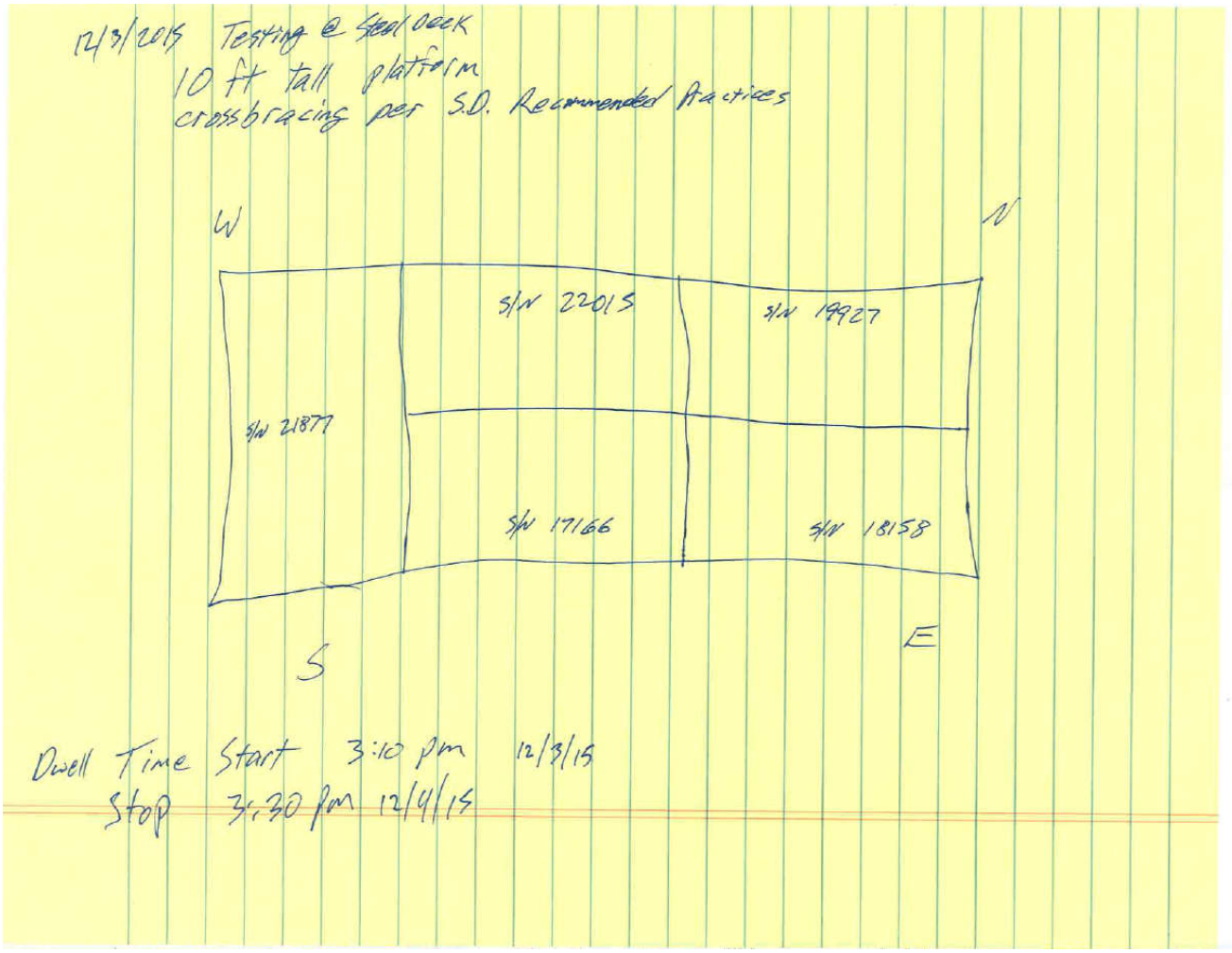

Figure 3-6 10 Foot High Platform Deck S/Ns

Odian Engineering Inc.
29979 Harvester Rd., Malibu, CA. 90265
Telephone (818) 371.7128 e-mail: kodian@verizon.net

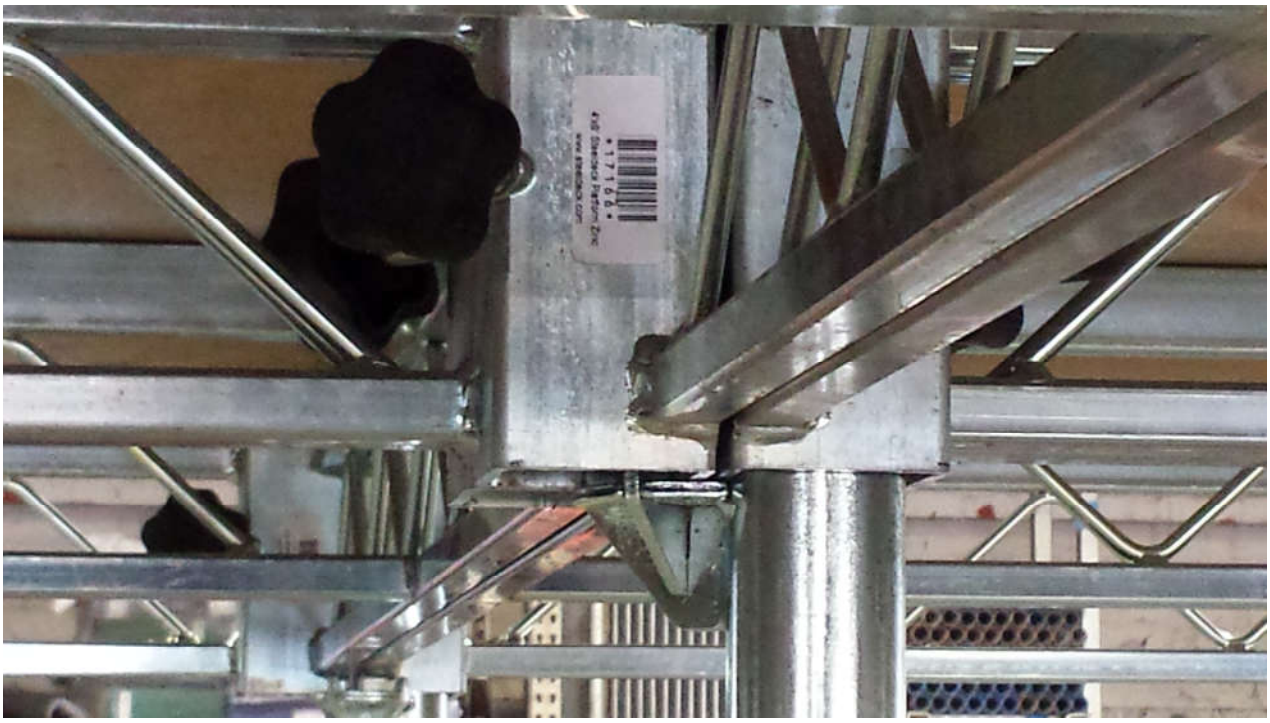

Figure 3-7 No distress of critical leg-to-deck support mount

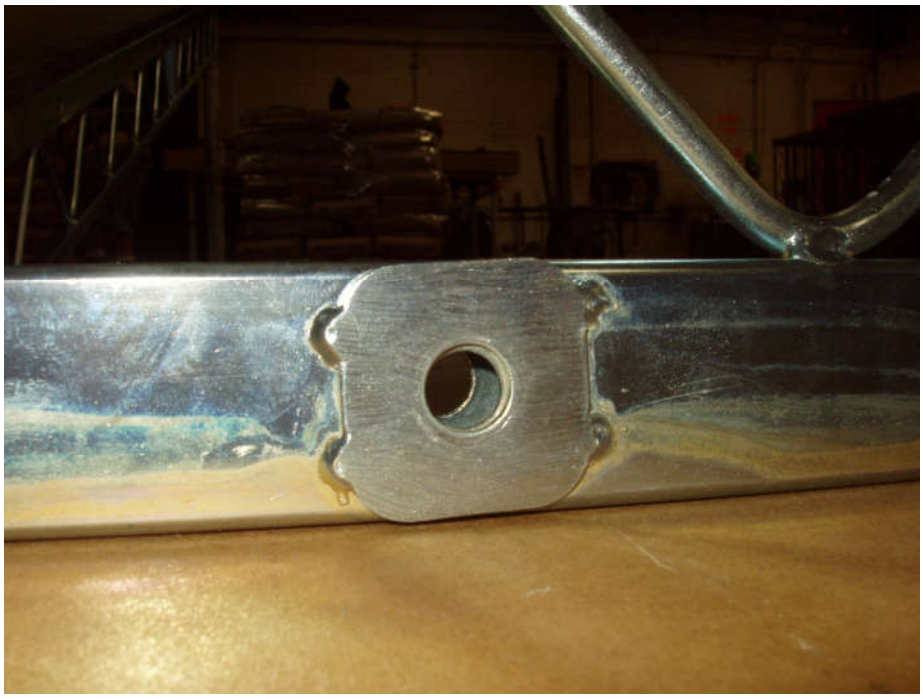

Figure 3-8 No distress of critical deck-to-deck bearing surfaces

Odian Engineering Inc.
29979 Harvester Rd., Malibu, CA. 90265
Telephone (818) 371.7128 e-mail: kodian@verizon.net

4.0 TEST RESULTS

The structure successfully met the test requirements as follows:

1. Under the Design Load, the deflection shall not exceed the limitations specified in California Code of Regulations, Title 24, Part 2, Section 1604.3 (longest span/360 inches).

Result: Range of 0.125 to 0.250 inches of maximum Sag deflection measured at mid span of the long 8 ft beams under a conservative 102.9 lbs/ft^2 Design Load. 0.250" < (8ft*12in/ft)/360 = 0.2667 inches allowed (See Report OE-08-05-303_rC).

2. Within 24 hours after removal of the test load, the structure shall have recovered not less than 75 percent of the maximum deflection.

Result: All platform legs and support structure experienced no plastic deformation and recovered 100% of their elastic deflections.

2. During and immediately after the test, the structure shall not show evidence of failure.

Result: At no time during the test or upon teardown inspection were any failures evident.

Odian Engineering Inc.
29979 Harvester Rd., Malibu, CA. 90265
Telephone (818) 371.7128 e-mail: kodian@verizon.net

5.0 SUMMARY OF FINDINGS

The subject Steeldeck® Standard platforms fabricated in accordance with dwg HEAMS106103 Rev. 0, dated 4/17/07 and erected on ten foot tall Steeldeck® legs with two courses of cross bracing as shown herein were found to meet and exceed the minimum performance standards of applicable **2022** California Code of Regulations, Title 24, Part 2.

A Design Load rating of 100 lbs/ft^2 is acceptable for the Steeldeck® Standard platforms fabricated in accordance with dwg HEAMS106103 Rev. 0, dated 4/17/07 and erected on ten foot tall Steeldeck® legs with two courses of cross bracing as shown herein.

Odian Engineering Inc.
29979 Harvester Rd., Malibu, CA. 90265
Telephone (818) 371.7128 e-mail: kodian@verizon.net

6.0 Appendix: dwg HEAMS106103 Rev. 0, dated 4/17/07

Odian Engineering Inc.
29979 Harvester Rd., Malibu, CA. 90265
Telephone (818) 371.7128 e-mail: kodian@verizon.net

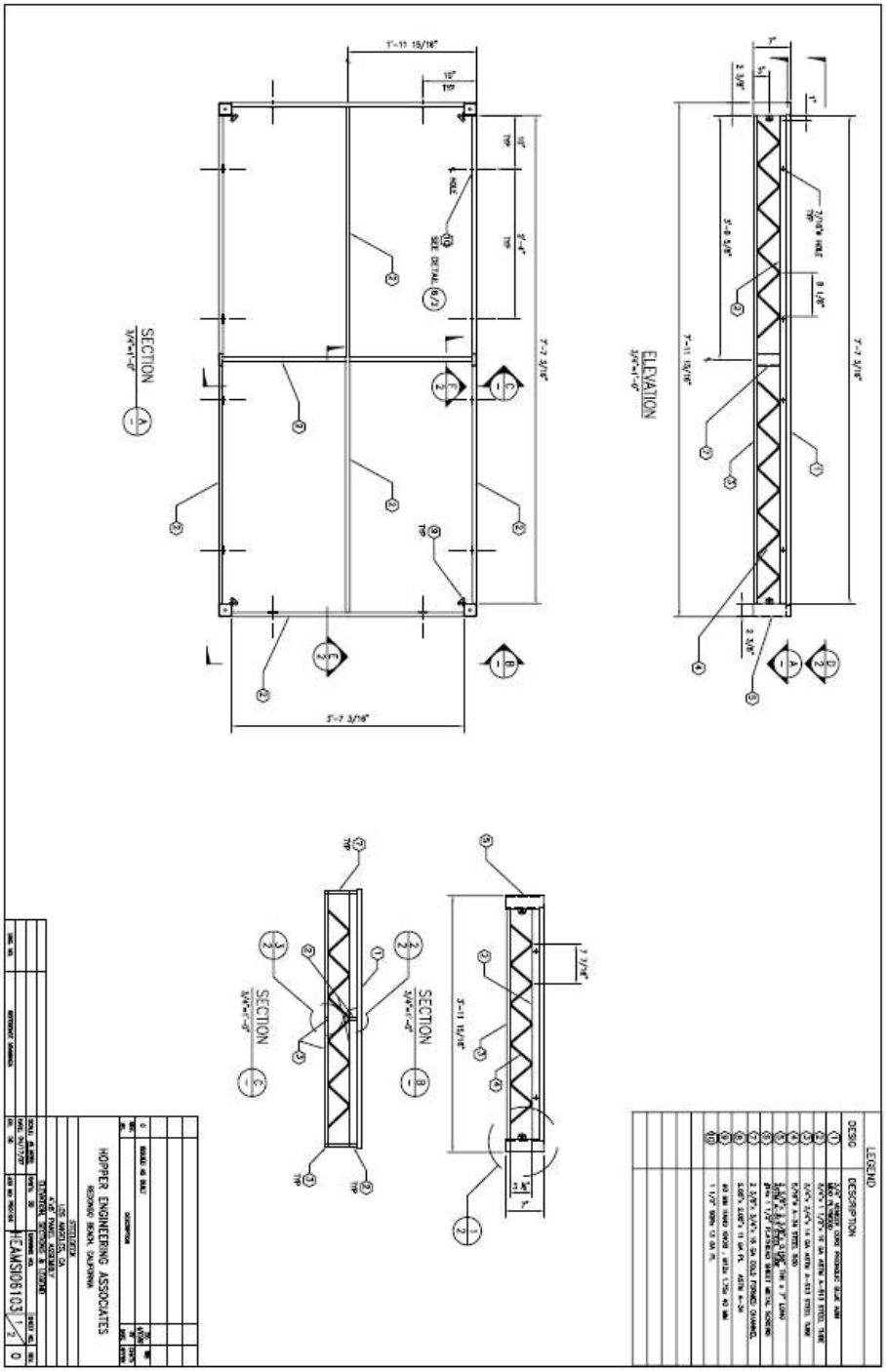

Odian Engineering Inc.
29979 Harvester Rd., Malibu, CA. 90265
Telephone (818) 371.7128 e-mail: kodian@verizon.net

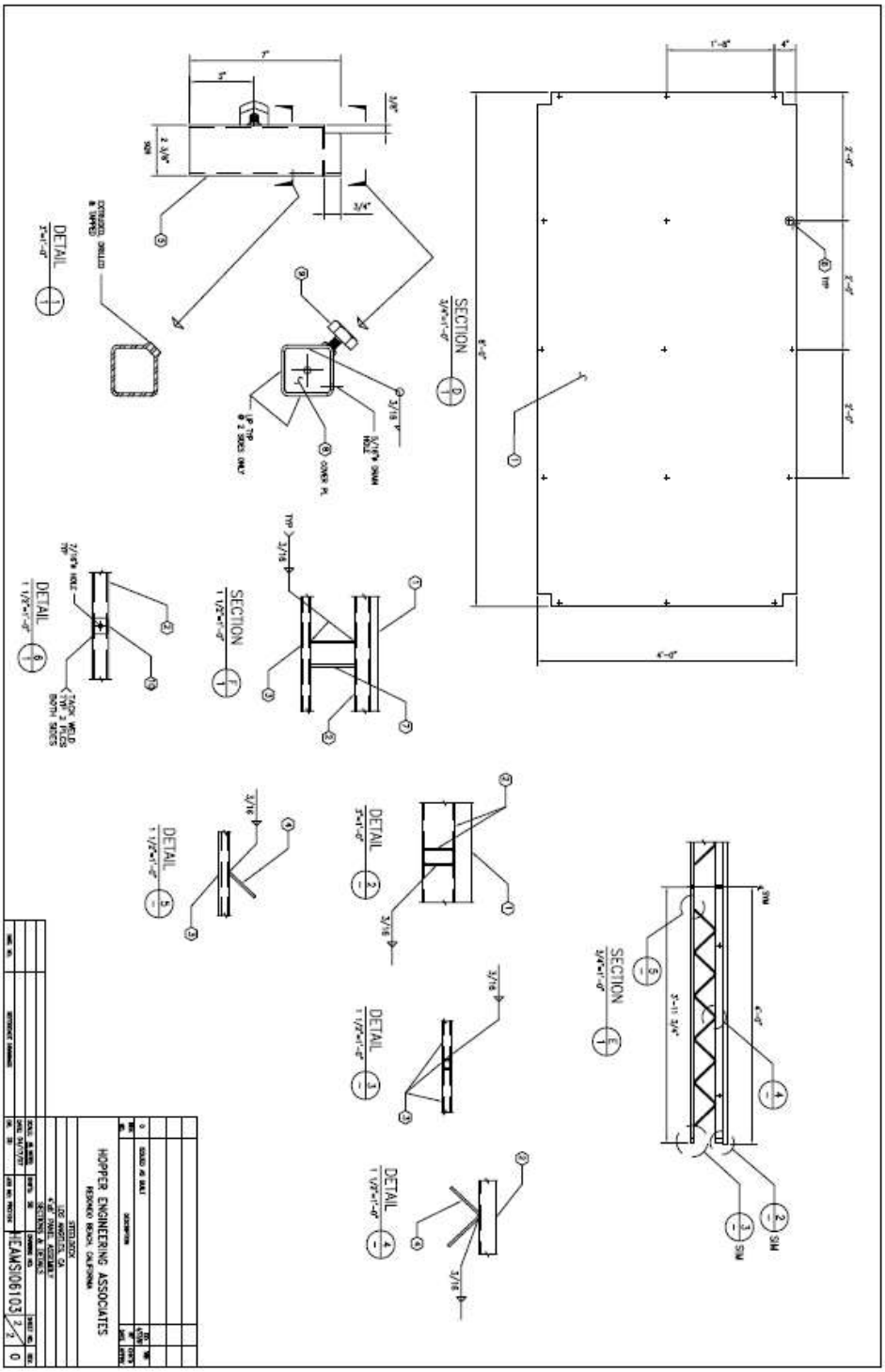

Odian Engineering Inc.
29979 Harvester Rd., Malibu, CA. 90265
Telephone (818) 371.7128 e-mail: kodian@verizon.net