ODIAN ENGINEERING inc
29979 Harvester Rd, Malibu, CA. 90265
Telephone: (818) 371-7128, e-mail: kodian@verizon.net

DOCUMENT NO. OE-08-10-302

TEST REPORT:

STEELDECK PLATFORM SYSTEMS,

GUARDRAIL

STRUCTURAL CAPACITY

Revision E Dated Oct. 2, 2024

REGISTERED PROFESSIONAL ENGINEER
ROBERT KIRK ODIAN
C 50668
Exp. 9/30/2024
CIVIL
STATE OF CALIFORNIA

Prepared for: **Steeldeck, Inc.**
13147 S Western Avenue
Gardena, CA 90249-1921

Approved By:

Name (print): Kirk Odian
Title: President, M.S., P.E.

PROPRIETARY DOCUMENT
The Information herein is privileged and confidential and shall not be disseminated, duplicated, reused or disclosed in any way without the prior written permission of STEELDECK, Inc. or Odian Engineering, Inc.

Log of Revisions

Revision Letter	Page Number	Section	Description of Change
IR	all	all	Initial release
A	all	all	Included current CBC 2013 Compliance, changed “stage” to “platform”.
B	21-30	5.0 & 6.0	Corrected Report Number typo in header.
C	i, v, 1, 6 & 21	Ref., 1.0, 1.2 & 5.0	Included current CBC 2016 Compliance.
D	Cover page		Updated Steeldeck address.
E	Cover page, i, v, 1, 6 & 21	1.0, 1.2 & 5.0	Updated to cite latest CBC 2022 revision. Also, all headers updated to show “Rev. E”.

Table of Contents

Log of Revisions i
List of Figures iii
List of Tables iv
References v
1.0 INTRODUCTION 1
1.1 Background 2
1.2 Test Objective 6
1.3 Previous Work 6
1.4 Limitations 8
2.0 EQUIPMENT, PROCEDURES AND TEST PARAMETERS 9
3.0 GUARDRAIL TEST 11
4.0 TEST RESULTS 20
5.0 SUMMARY OF FINDINGS 21
6.0 Appendix: Load Cell Calibration Certificate. 22
7.0 Appendix: Guardrail dwg 08-01, Rev. IR, dated 10/21/08 24
8.0 Appendix: dwg HEAMS106103 Rev. 0, dated 4/17/07 28

List of Figures

Figure 1-1 STEELDECK® Guardrail Modules 1
Figure 1-2 Typical STEELDECK® Guardrail Mounting Joint 3
Figure 1-3 Typical STEELDECK® Guardrail Mounting Joint, view looking towards platform 4
Figure 1-4 Typical STEELDECK® Guardrail Mounting Joint, view from under platform 5
Figure 1-5 Manufacturer's "Company Test" 7
Figure 2-1 Test Setup 9
Figure 2-2 Test Setup, Outboard direction 10
Figure 2-3 Test Setup, Outboard direction 10
Figure 3-1 Elastic Deflection, Outboard Test #1 loaded to 207.1 lbs 11
Figure 3-2 Outboard Test #1 loaded to 207.1 lbs 12
Figure 3-3 Elastic Deflection, Inboard Test #2 loaded to 214.4 lbs 13
Figure 3-4 Inboard Test #2 loaded to 214.4 lbs 14
Figure 3-5 Elastic recovery after tests #1 & #2 15
Figure 3-6 Elastic Deflection, Outboard Test #3 loaded to 382.1 lbs 16
Figure 3-7 Outboard Test #3 loaded to 382.1 lbs 17
Figure 3-8 Elastic recovery after test #3 18
Figure 3-9 Guardrail bottom joint after tests #1-3 19

List of Tables

Table 2-1 Loading Sequence & Procedure.....18

References

1. 2007 California Code of Regulations, Title 24, Part 2, *California Building Code*
2. 2001 California Code of Regulations, Title 24, Part 2, *California Building Code*
3. 1994 Uniform Building Code, Volume 2, Structural Engineering Design Provision.
4. Steeldeck, Set-up and Safety Manual, Rev. 5/2002.
5. Steeldeck, Platform Systems Catalog, May 2002.
6. British Standards Institution Specification BS 1139: Part 2: 1982, Metal Scaffolding.
7. British Standards Institution Specification BS EN 74-1:2005, Couplers, spigot pins and baseplates for use in falsework and scaffolds, Part 1: Couplers for tubes – Requirements and test procedures.
8. 4'x 8' Steeldeck® Platform Evaluation, Rev. 1 dated April 2007, Hopper Engineering Associates, PRO 196
9. OE Document No.: OE-08-05-301, Test Report: Steeldeck Platform Systems Structural Capacity, Rev. B Dated March 11, 2014.
10. 2013 California Code of Regulations, Title 24, Part 2, *California Building Code*
11. 2016 California Code of Regulations, Title 24, Part 2, *California Building Code*
12. 2022 California Code of Regulations, Title 24, Part 2, *California Building Code*

1.0 INTRODUCTION

This test report presents independent testing and findings conducted by Odian Engineering of the Guardrails used on the Steeldeck® platform system. The prior Revision "IR" of this report presented the testing conducted to substantiate the structural integrity of the subject Guardrail system by way of live load testing consistent with the current 2007 California Code of Regulations, Title 24, Part 2, Chapters 16 & 17. Subsequent Revision "A" of the test report **showed** continued compliance with the **then** current 2013 California Code of Regulations, Title 24, Part 2, Chapters 16 & 17. **This subsequent Revision "E" of the test report shows continued compliance with the current 2022 California Code of Regulations, Title 24, Part 2, Chapters 16 & 17**. A standard 4 ft. Guardrail assembled to a 4'x 4' deck in accordance with the manufacturer's Set-up and Safety Manual (Ref. 4) was tested herein. This configuration represents the typical modular installation which can be repeated side by side for longer rail configurations. The rail modules do not interconnect and they function independently of the neighboring modules, thus this unit test bounds all rail configurations.

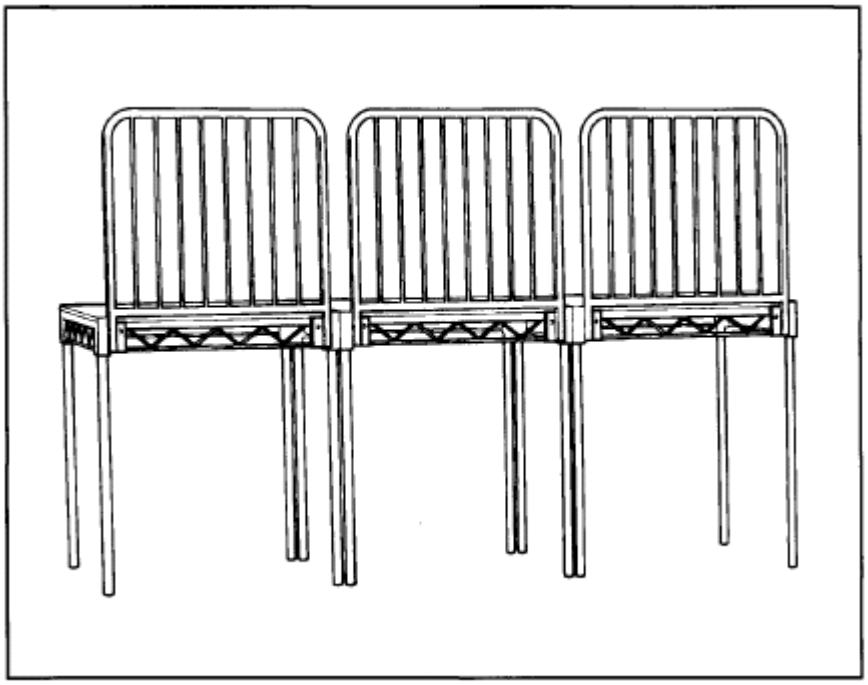

Figure 1-1 STEELDECK® Guardrail Modules

Odian Engineering Inc.
29979 Harvester Rd., Malibu, CA. 90265
Telephone (818) 371.7128 e-mail: kodian@verizon.net

1.1 Background

Steeldeck manufactures platform systems for sale and rent. These systems are typically employed as assembled platforms in various private and sometimes public venues. Often, the platforms are assembled as a connected system to erect a large platform of variable shape. This is accomplished by virtue of the modular design and the ability to connect the individual platforms of different sizes and shapes together. The platforms which contain straight edges can be fitted with modular Guardrails.

As previously stated, a system of one 4'x 4' deck assembled with a single Guardrail was selected as the test configuration. This configuration was selected since it represents the typical modular installation, on which the critical loading per California Code of Regulations was to be applied.

The Guardrail system is comprised of the rail body, support pins (fixed to the leg bottom plates), two backing plates and two mounting bolts. When fitting a given platform with the Guardrail system, the rail is engaged to the platform by setting the support pins onto the lower chord of the platform truss. The backing plates are then positioned and clamped down with mounting bolts. The following figures show Guardrail installation. Note that the Guardrails are offered in three different widths: 2', 3' & 4'.

Odian Engineering Inc.
29979 Harvester Rd., Malibu, CA. 90265
Telephone (818) 371.7128 e-mail: kodian@verizon.net

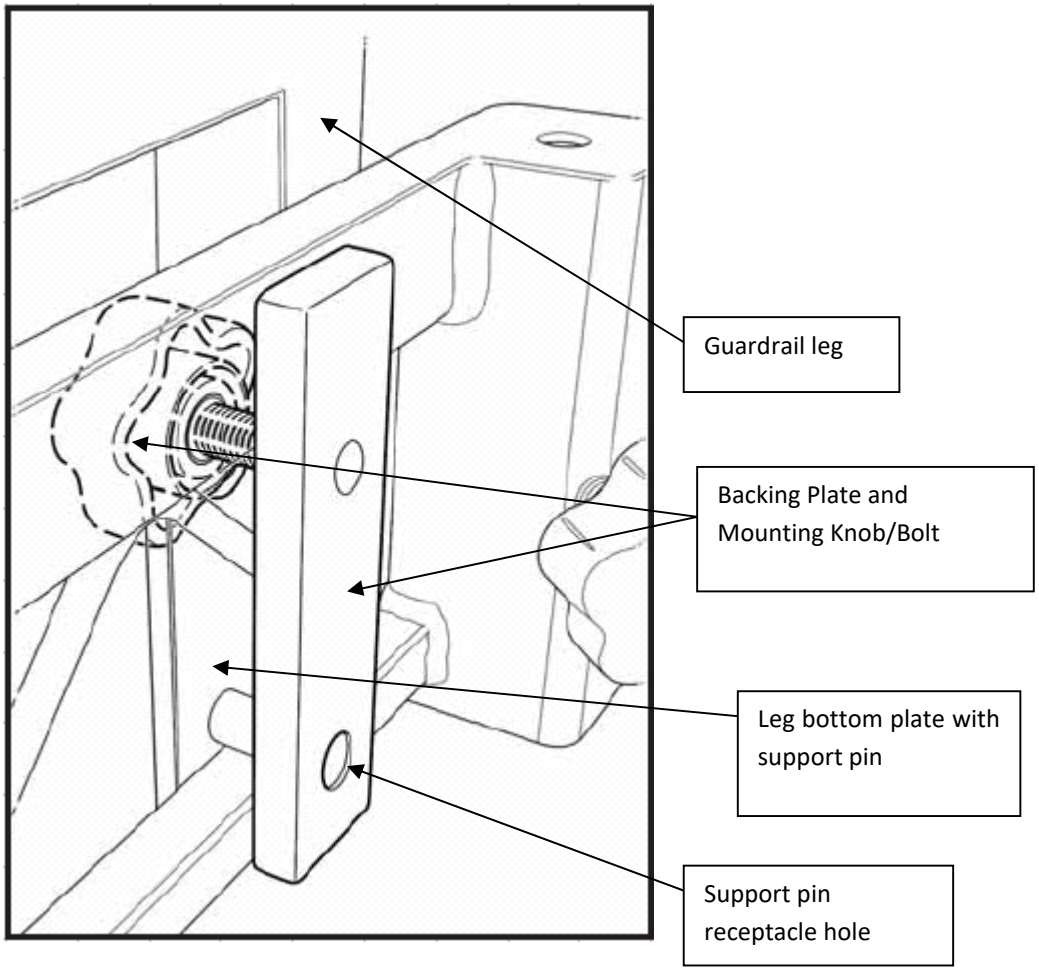

Figure 1-2 Typical STEELDECK® Guardrail Mounting Joint

Odian Engineering Inc.
29979 Harvester Rd., Malibu, CA. 90265
Telephone (818) 371.7128 e-mail: kodian@verizon.net

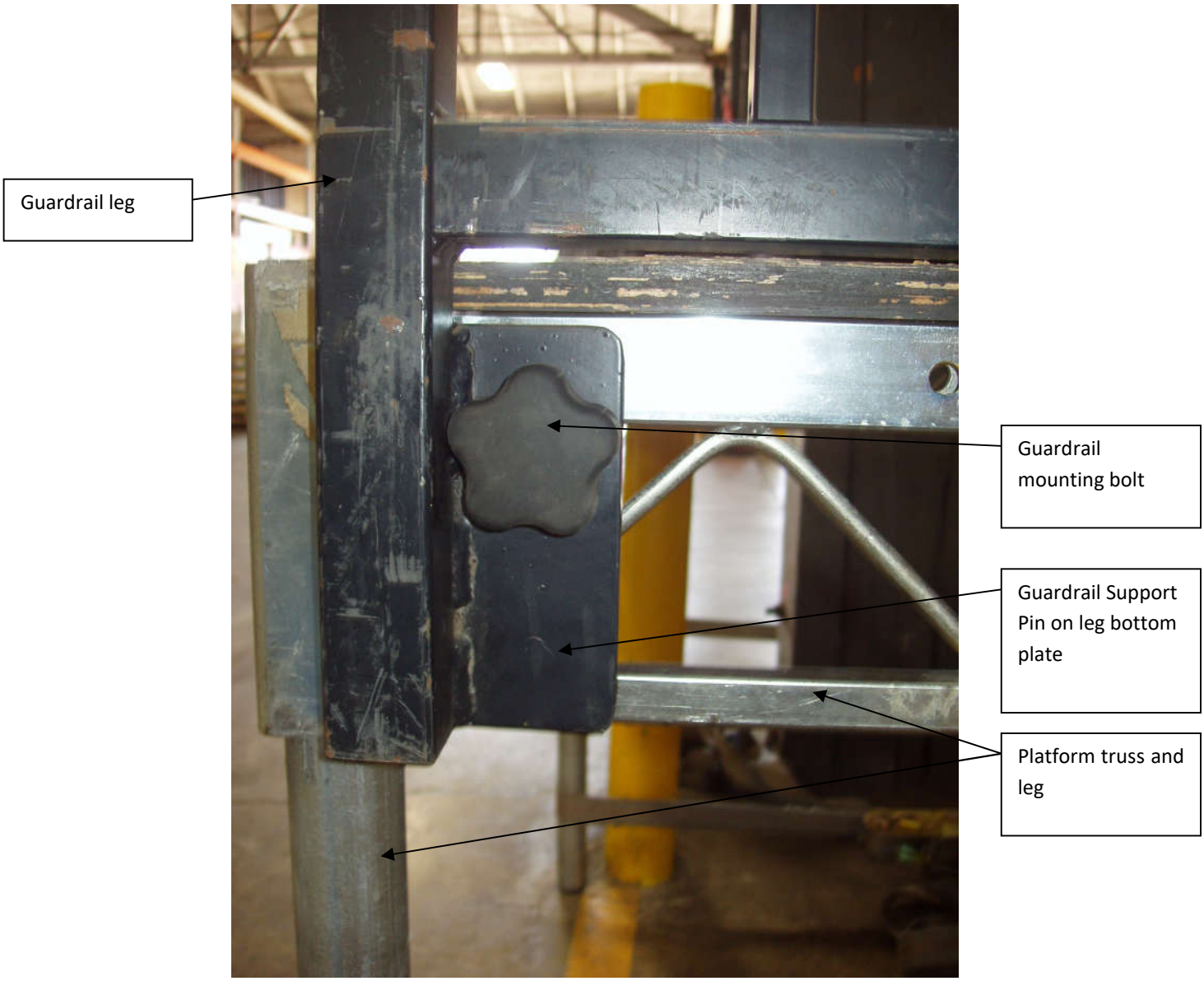

Figure 1-3 Typical STEELDECK® Guardrail Mounting Joint, view looking towards platform

Odian Engineering Inc.
29979 Harvester Rd., Malibu, CA. 90265
Telephone (818) 371.7128 e-mail: kodian@verizon.net

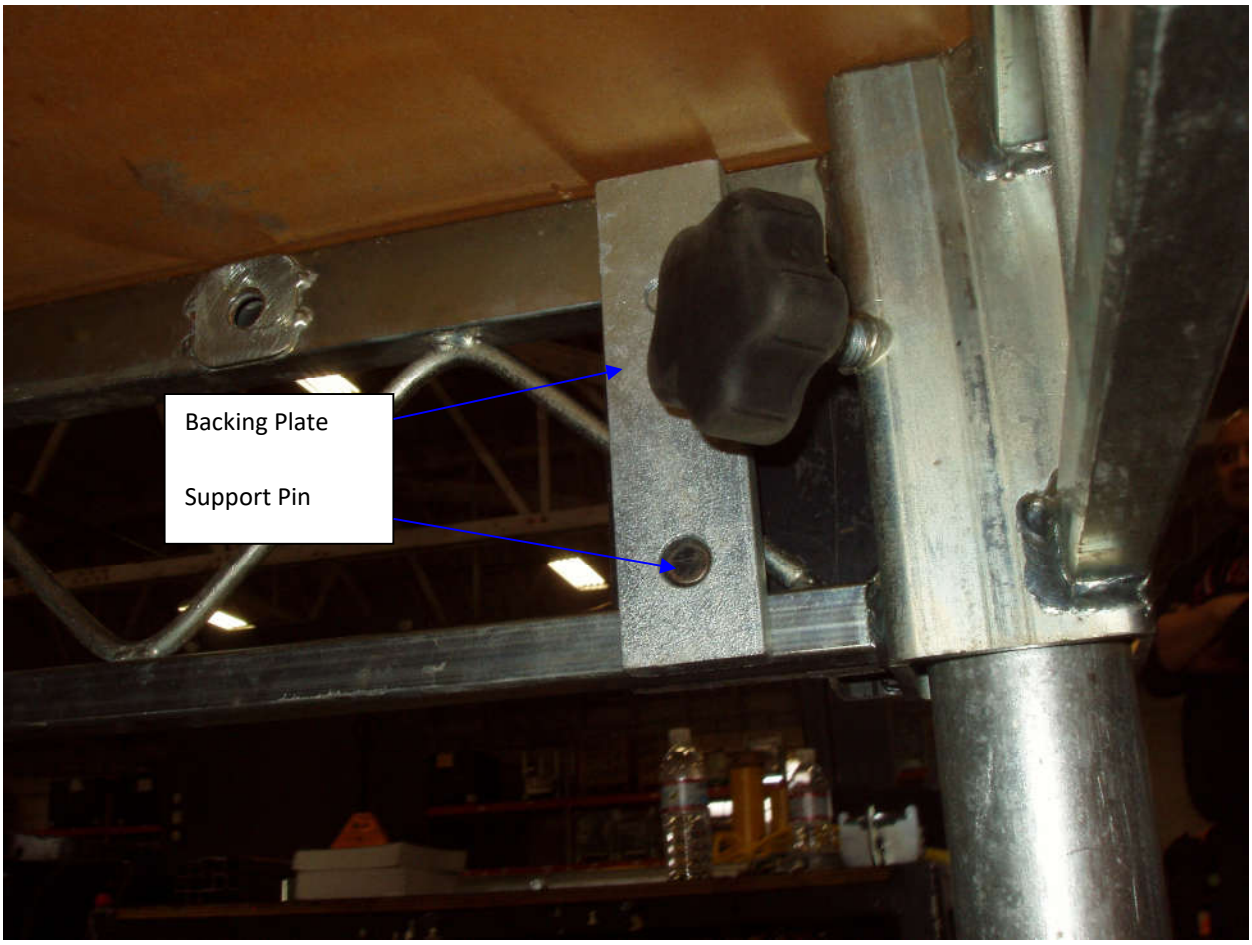

Figure 1-4 Typical STEELDECK® Guardrail Mounting Joint, view from under platform

Odian Engineering Inc.
29979 Harvester Rd., Malibu, CA. 90265
Telephone (818) 371.7128 e-mail: kodian@verizon.net

1.2 Test Objective

The 2022 California Code of Regulations, Title 24, Part 2, Chapters 16, Table 1607.1, Minimum Uniformly Distributed Live Loads and Minimum Concentrated Live Loads, and Section 1607.9 establishes the required loading for Railings and Guardrails as 50 lbs per linear foot or 200 lbs applied in any direction at any point on the rail. Section 1709 of the same code sets forth In-Situ Load Test methodology. Consistent with the intent of Section 1709, the objective of this testing was to subject the Guardrail in excess of the required design load in the most critical directions and location. The test procedure employed has been developed by this author, a registered Professional Engineer in the State of California. The test procedure simulates loads and conditions of application that the Guardrail structure may be subjected to in normal use. The structure shall be considered to have successfully met the test requirements when the following criteria are satisfied:

1. The Guardrail shall be capable of withstanding the applied design load (200 lbs) without separating or otherwise catastrophic failure.
2. Upon removal of the test load, the structure shall have undergone no gross permanent deformation.

1.3 Previous Work

The subject Guardrail systems, as designed, have been in use for over 20 years primarily in the entertainment industry. They have been subjected to on the job in-situ loading reportedly without any catastrophic incident. The typical on the job loading demands placed on the Guardrails is far less than the aforementioned design requirements.

The manufacturer conducted a similar test as that proposed herein; "Company Test". He supported a 4' x 4' Steeldeck rental platform vertically, about six inches off the ground using various lengths of pipe and scaffolding fittings. He then attached a rental 4' guardrail to this 4' x 4' platform. He elected to use Schedule 40 1 ½" pipe as the test load, which weighs 2.72 pounds per linear foot. Using 4' steel pipes, which weigh 10.88 pounds each, 207.72 pounds (19 pipes) was applied to the top of the rail, acting vertically down. The guardrail deflected down about ½" from its unloaded resting position. When the load of pipe was removed, and the deck and guardrail disassembled, no damage was reported on any components. A photograph of this

Odian Engineering Inc.
29979 Harvester Rd., Malibu, CA. 90265
Telephone (818) 371.7128 e-mail: kodian@verizon.net

"Company Test" is shown below. The "Company Test" loading was not necessarily localized at a single point, at the most critical location.

Figure 1-5 Manufacturer's "Company Test"

Odian Engineering Inc.
29979 Harvester Rd., Malibu, CA. 90265
Telephone (818) 371.7128 e-mail: kodian@verizon.net

1.4 Limitations

The results of the testing proposed herein is limited to the following:

1. Guardrail modules made of the same grade and configuration as that which was tested (per Steeldeck dwg 08-01 Rev. IR, dated 10/21/08) and installed in accordance with Reference 4. Inclusive of the shorter 2' & 3' width versions which are less critical.
2. Guardrail modules affixed to platforms made of the same grade and truss beam configuration as that which was tested (per dwg HEAMS106103 Rev. 0, dated 4/17/07).

Odian Engineering Inc.
29979 Harvester Rd., Malibu, CA. 90265
Telephone (818) 371.7128 e-mail: kodian@verizon.net

2.0 EQUIPMENT, PROCEDURES AND TEST PARAMETERS

One 4' x 4' rectangular platform was erected on a flat concrete floor inside a warehouse. One 4' modular section of Guardrail was affixed to the platform on one end, while the opposite end was fixed to rigid structure by way of tie down straps. The platform conformed to dwg HEAMS106103 Rev. 0, and was set on 3' legs (1-1/2 Schedule 40 steel pipe). All aforementioned platform systems components were adjoined together as per the standard procedures outlined in Reference 4. All equipment and hardware were randomly selected from rental stock to ensure a typical "as used" condition. Outboard, and then inboard, horizontal normal loads were imparted to an upper corner (critical single side loading and max bending lever arm) via cargo straps with ratcheting tensioners. In series with the load line was a Chatillon load cell, model DFE-500 (S/N T09409) in current calibration traceable to National Standards (see Appendix).

Figure 2-1 Test Setup

Odian Engineering Inc.
29979 Harvester Rd., Malibu, CA. 90265
Telephone (818) 371.7128 e-mail: kodian@verizon.net

Figure 2-2 Test Setup, Outboard direction

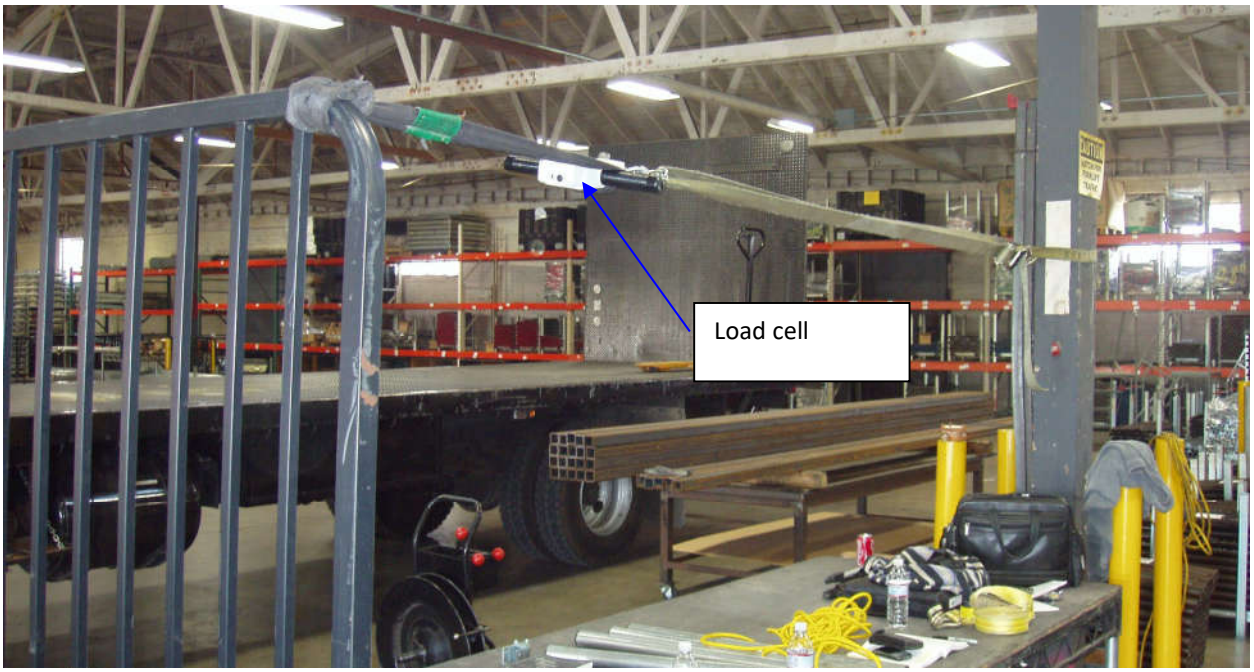

Figure 2-3 Test Setup, Outboard direction

Odian Engineering Inc.
29979 Harvester Rd., Malibu, CA. 90265
Telephone (818) 371.7128 e-mail: kodian@verizon.net

3.0 GUARDRAIL TEST

On April 16, 2008, this author conducted the Guardrail tests as described in the preceding chapter. All phases of the test equipment erection, loading and unloading were witnessed by this author.

First, a live load consisting of 207.1 lbs (Design requirement = 200 lbs) was applied to the Guardrail corner in the outboard direction away from the platform.

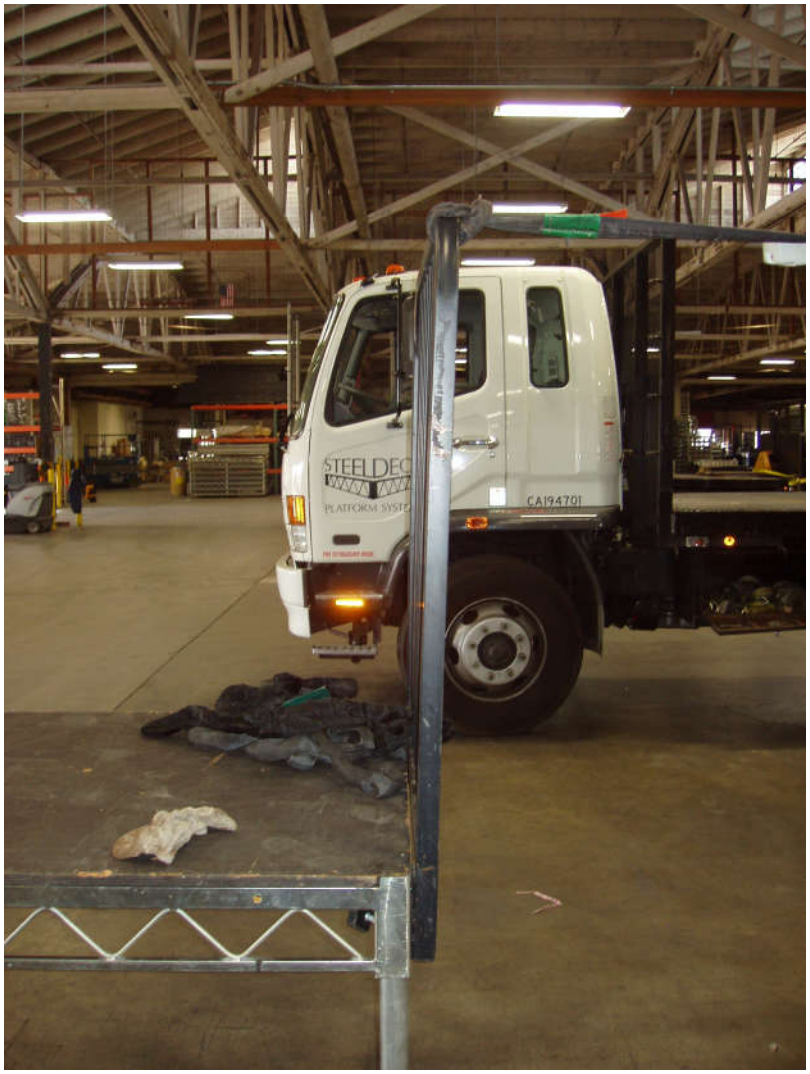

Figure 3-1 Elastic Deflection, Outboard Test #1 loaded to 207.1 lbs

Odian Engineering Inc.
29979 Harvester Rd., Malibu, CA. 90265
Telephone (818) 371.7128 e-mail: kodian@verizon.net

Figure 3-2 Outboard Test #1 loaded to 207.1 lbs

Odian Engineering Inc.
29979 Harvester Rd., Malibu, CA. 90265
Telephone (818) 371.7128 e-mail: kodian@verizon.net

Then, a live load consisting of 214.4 lbs (Design requirement = 200 lbs) was applied to the Guardrail in the inboard direction towards the platform.

Figure 3-3 Elastic Deflection, Inboard Test #2 loaded to 214.4 lbs

Odian Engineering Inc.
29979 Harvester Rd., Malibu, CA. 90265
Telephone (818) 371.7128 e-mail: kodian@verizon.net

Figure 3-4 Inboard Test #2 loaded to 214.4 lbs

Odian Engineering Inc.
29979 Harvester Rd., Malibu, CA. 90265
Telephone (818) 371.7128 e-mail: kodian@verizon.net

Figure 3-5 Elastic recovery after tests #1 & #2

Odian Engineering Inc.
29979 Harvester Rd., Malibu, CA. 90265
Telephone (818) 371.7128 e-mail: kodian@verizon.net

Then, a live load consisting of 382.1 lbs (Design requirement = 200 lbs) was applied to the Guardrail in the outboard direction away from the platform. This third test was done for conservatism in excess of the Design Requirement by approximately 190%.

Figure 3-6 Elastic Deflection, Outboard Test #3 loaded to 382.1 lbs

Odian Engineering Inc.
29979 Harvester Rd., Malibu, CA. 90265
Telephone (818) 371.7128 e-mail: kodian@verizon.net

Figure 3-7 Outboard Test #3 loaded to 382.1 lbs

Odian Engineering Inc.
29979 Harvester Rd., Malibu, CA. 90265
Telephone (818) 371.7128 e-mail: kodian@verizon.net

Figure 3-8 Elastic recovery after test #3

Table 2-1 Loading Sequence & Procedure

Load Step	Applied Load (lbs)	Apprx. Dwell Time (min)
1	207.1	3
2	214.4	9
3	382.1	5

Odian Engineering Inc.
29979 Harvester Rd., Malibu, CA. 90265
Telephone (818) 371.7128 e-mail: kodian@verizon.net

Intermediate inspections and teardown inspections of the test articles were carried out by this author. No detrimental distress or failure was observed.

Figure 3-9 Guardrail bottom joint after tests #1-3

Odian Engineering Inc.
29979 Harvester Rd., Malibu, CA. 90265
Telephone (818) 371.7128 e-mail: kodian@verizon.net

4.0 TEST RESULTS

The structure successfully met the test requirements as follows:

1. The Guardrail shall be capable of withstanding the applied design load (200 lbs) without separation or otherwise catastrophic failure.

Result: At no time during the test or upon teardown inspection were any failures evident. The maximum 382.1 lbs critical outboard test was 191% of the Design Load requirement.

2. Upon removal of the test load, the structure shall have undergone no gross permanent deformation.

Result: The tested Guardrail system recovered elastically with no permanent set upon unloading.

Odian Engineering Inc.
29979 Harvester Rd., Malibu, CA. 90265
Telephone (818) 371.7128 e-mail: kodian@verizon.net

5.0 SUMMARY OF FINDINGS

The subject Steeldeck® Guardrail fabricated in accordance with Steeldeck dwg 08-01, Rev. IR dated 10-21-08, and affixed to Steeldeck® platforms fabricated with the same grade and construction as per dwg HEAMS106103 Rev. 0, dated 4/17/07, were found to meet and exceed the minimum performance standards of applicable 2022 California Code of Regulations, Title 24, Part 2.

A Design load rating of 200 lbs is acceptable for these Steeldeck® Guardrails.

Odian Engineering Inc.
29979 Harvester Rd., Malibu, CA. 90265
Telephone (818) 371.7128 e-mail: kodian@verizon.net

6.0 Appendix: Load Cell Calibration Certificate.

Chatillon®

A registered trademark of AMETEK, Inc.

A4716 ISO 9001

Test and Calibration Instruments Division

AMETEK®
Measurement & Calibration Technologies Division
8600 Somerset Drive
Largo, FL 33773
(727) 536-7831

ACCREDITED
Certificate Number: 1918.01

CERTIFICATE OF CALIBRATION # WS1 24357

CUSTOMER:

ADDRESS:

CITY/STATE:

TRACEABILITY STATEMENT

TRACEABILITY AS DEFINED BY THIS CERTIFICATE IS TO AN AMETEK TEST AND CALIBRATION INSTRUMENTS DIVISION LABORATORY REFERENCE STANDARD, OR STANDARDS. SAID STANDARDS ARE ULTIMATELY TRACEABLE BY MEANS OF AN UNBROKEN CHAIN OF CALIBRATIONS TO THE INTERNATIONAL SYSTEM OF UNITS (SI-SYSTEME INTERNATIONAL D'UNITES) THROUGH AN ACCREDITED NATIONAL METROLOGY INSTITUTE (SUCH AS NIST, PTB/DKD, BNM, LNE, IGMC, DTI, CENAM, ETC), OR BY REFERENCE TO A NATURAL PHYSICAL CONSTANT ACCEPTED BY CGPM AND CIPM. AMETEK CALIBRATION NORMS ARE IN ACCORDANCE WITH THE BASIC REQUIREMENTS OF ISO 10012 AND ANSI Z540-1. REFERENCE: ISO 17025, SECTION 5.6

MODEL: DFE-500
SERIAL NUMBER: T09409
CALIBRATION PROCEDURE: MGFP-89
DATE CERTIFIED: 10/12/2007

PRODUCT SPECIFICATION

CAPACITY: 500 LBF X 0.1 LBF
ACCURACY LIMITS: +/-0.25% OF FULL SCALE
CONDITION: NEW

PAGE 1 OF 2

Odian Engineering Inc.
29979 Harvester Rd., Malibu, CA. 90265
Telephone (818) 371.7128 e-mail: kodian@verizon.net

TEST (LBF) STANDARD	AS RECEIVED TENSION	AS RECEIVED COMPRESSION	AS CALIBRATED TENSION	AS CALIBRATED COMPRESSION
100.0	0.0	0.0	-100.0	100.4
200.0	0.0	0.0	-200.0	200.4
300.0	0.0	0.0	-300.0	300.4
400.0	0.0	0.0	-399.9	400.4
500.0	0.0	0.0	-499.9	500.5
0.0	0.0	0.0	0.0	0.0

NOTE:

1. THE ABOVE LISTED RESULTS RELATE ONLY TO THE MODEL AND SERIAL NUMBER OF THE UNIT AS SPECIFIED ON THIS CERTIFICATE OF CALIBRATION.
2. CALIBRATION PERFORMED AT 71.24 DEGREES F AND 55.60 % R.H.
3. THIS CERTIFICATE OF CALIBRATION SHALL NOT BE REPRODUCED EXCEPT IN FULL, WITHOUT THE WRITTEN APPROVAL OF AMETEK, INC.
4. CALIBRATION STANDARDS HAVE A ONE YEAR CALIBRATION CYCLE.
5. THE CONFIDENCE LEVEL ON UNCERTAINTY STATEMENTS IS 95% (K=2) UNLESS OTHERWISE INDICATED.

CALIBRATION TRACEABILITY

REFERENCE	WORK STATION	CALIBRATION ID	CAL STD DUE DATE
WEIGHT SET	WS2	170-069	7/28/2008

TYPICAL MEASUREMENT UNCERTAINTY = 0.033% OF FULL SCALE

AMETEK Test and Calibration Instruments Division certifies that the product referenced in the Certificate meets specifications; and, further certifies that the referenced instrument was serviced and/or calibrated using quality and manufacturing systems governed by the requirements of ISO 9001 registered compliant, file UL A4716.

Calibrated by: MARTHA MURILLO Approved by: CERTIFIED OPERATOR

Date: 10/12/2007 Date: 10/12/2007

Report Number: WS1 24357 PAGE 2 OF 2

Odian Engineering Inc.
29979 Harvester Rd., Malibu, CA. 90265
Telephone (818) 371.7128 e-mail: kodian@verizon.net

7.0 Appendix: Guardrail dwg 08-01, Rev. IR, dated 10/21/08

Odian Engineering Inc.
29979 Harvester Rd., Malibu, CA. 90265
Telephone (818) 371.7128 e-mail: kodian@verizon.net

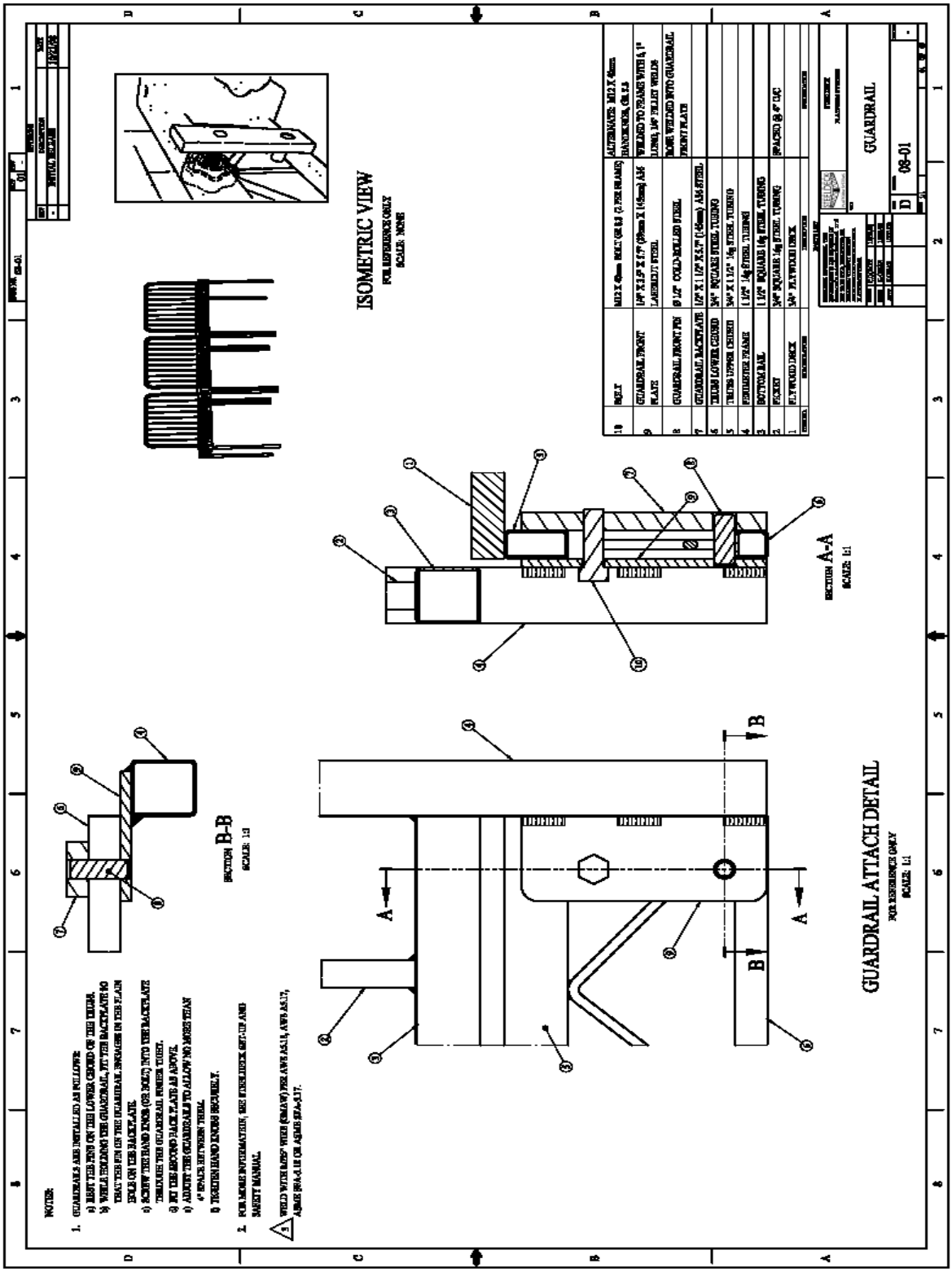

Odian Engineering Inc.
29979 Harvester Rd., Malibu, CA. 90265
Telephone (818) 371.7128 e-mail: kodian@verizon.net

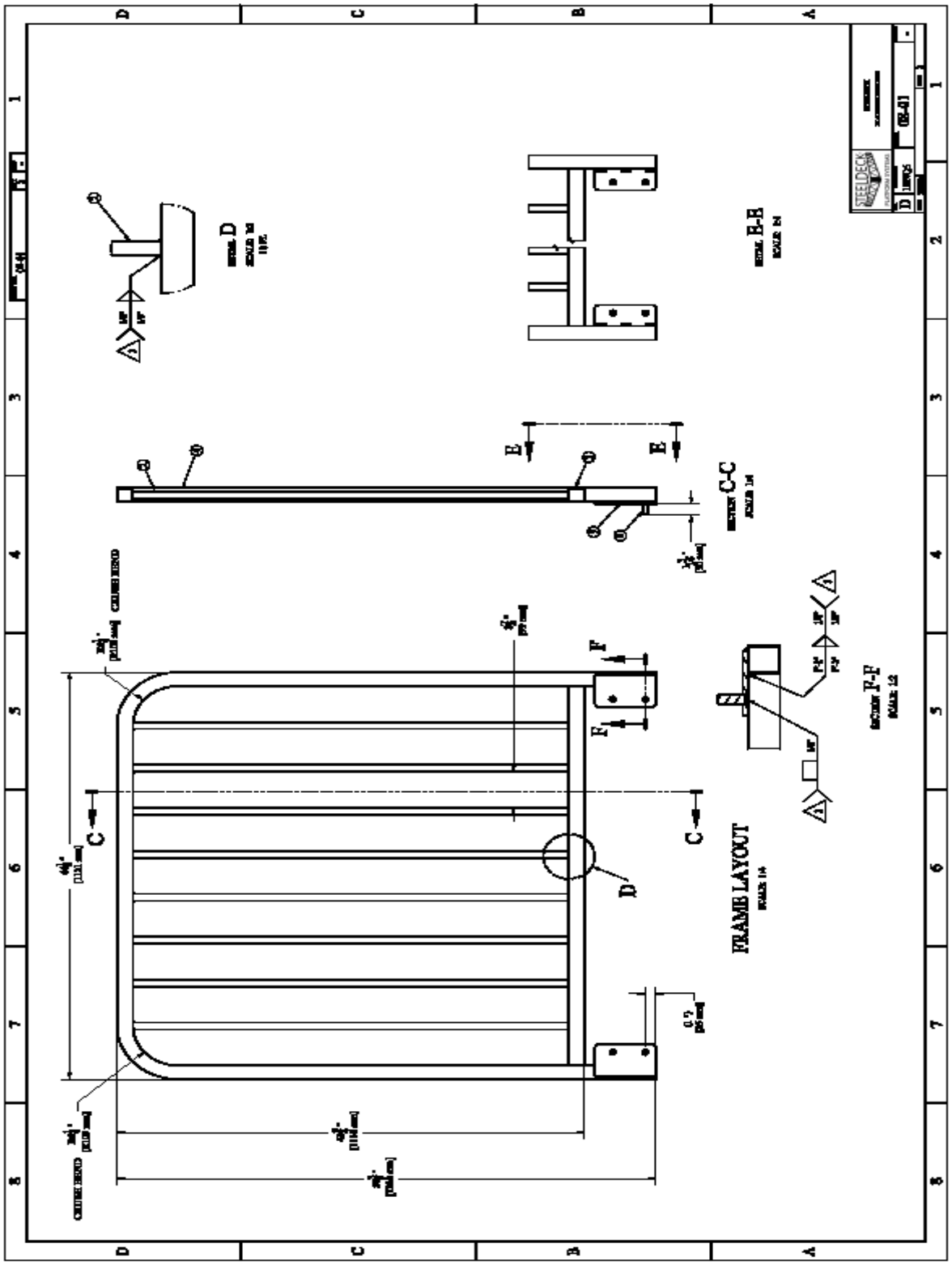

Odian Engineering Inc.
29979 Harvester Rd., Malibu, CA. 90265
Telephone (818) 371.7128 e-mail: kodian@verizon.net

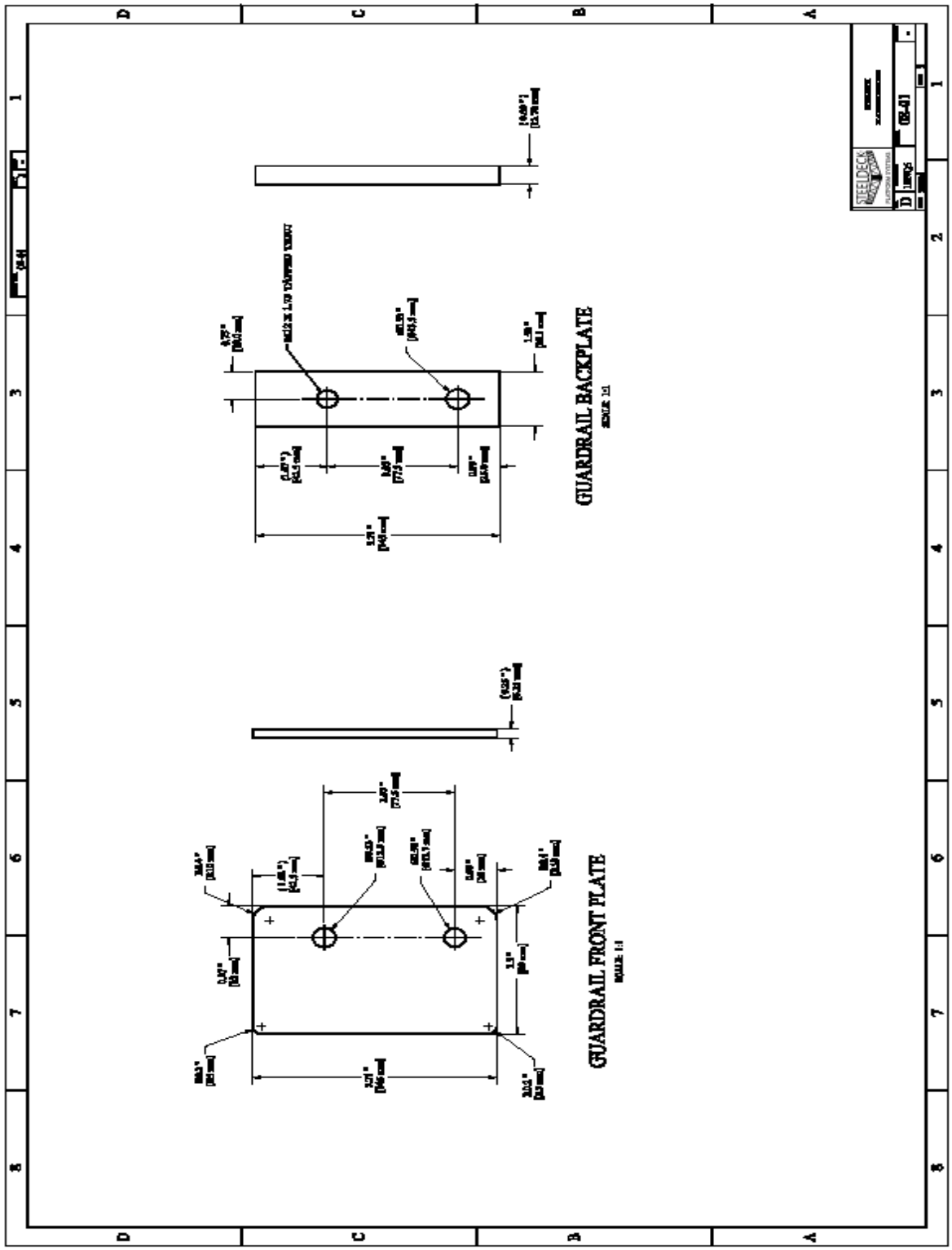

Odian Engineering Inc.
29979 Harvester Rd., Malibu, CA. 90265
Telephone (818) 371.7128 e-mail: kodian@verizon.net

8.0 Appendix: dwg HEAMS106103 Rev. 0, dated 4/17/07

Odian Engineering Inc.
29979 Harvester Rd., Malibu, CA. 90265
Telephone (818) 371.7128 e-mail: kodian@verizon.net

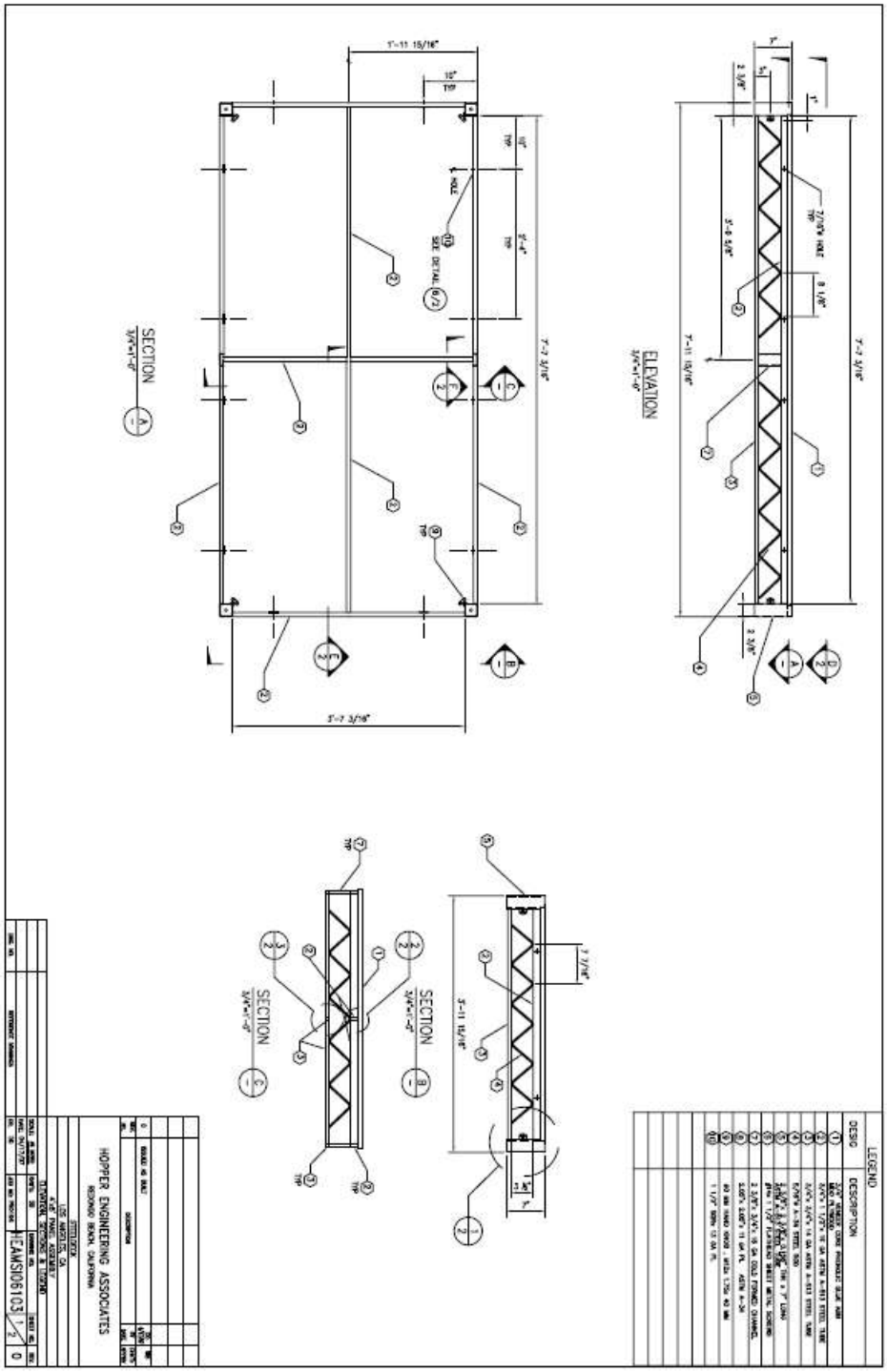

Odian Engineering Inc.
29979 Harvester Rd., Malibu, CA. 90265
Telephone (818) 371.7128 e-mail: kodian@verizon.net

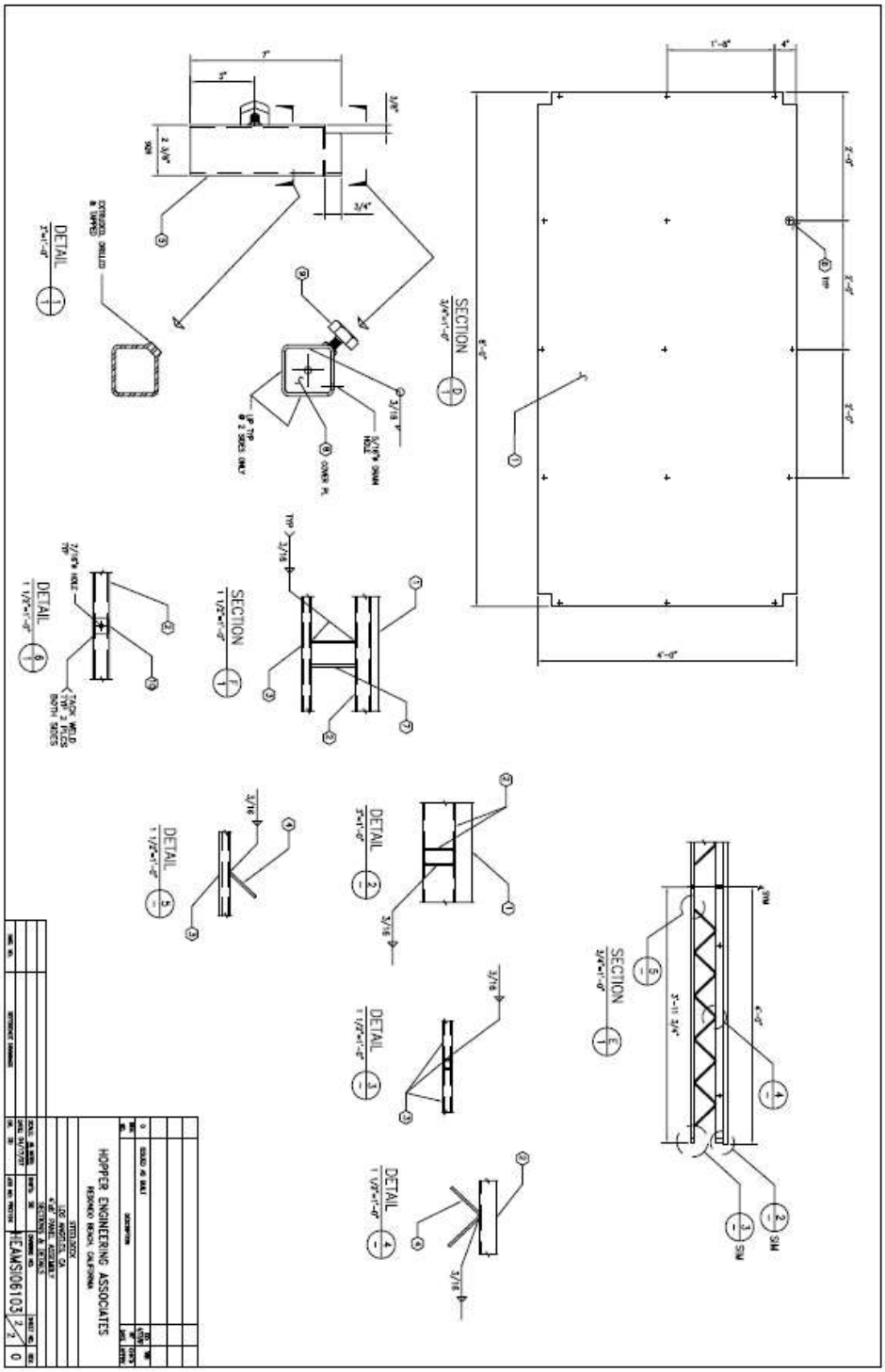

Odian Engineering Inc.
29979 Harvester Rd., Malibu, CA. 90265
Telephone (818) 371.7128 e-mail: kodian@verizon.net